CHIARAVALLI GROUP SpA

TENSIONERS
CHAIN TENSIONER
BELT TENSIONER

CATALOGUE UNDER REVIEW
For inquiries write at tensioner@chiaravalli.com

Made in Italy

CHIARAVALLI GROUP SpA

CATALOGUE ORDER
For inquiries write: tensioner@chiaravalli.co

CHIARAVALLI GROUP world:
much more than a collection of perfects mechanical components

CHIARAVALLI® GROUP SpA

TENSIONERS-CHAIN TENSIONER BELT TENSIONER BRAND **CHT®**

LINEAR TENSIONERS

ASSEMBLY INSTRUCTION **TYPE AS - TYPE L** page 6
LINEAR TENSIONER **CHT-L** 7
LINEAR TENSIONER **CHT-AS** 8
LINEAR CHAIN TENSIONER **CHT-ASR CHT-ASTN** 9
LINEAR CHAIN TENSIONER **CHT-ASFR TN** 10
LINEAR BELT TENSIONER **CHT-ASRU** 11
LINEAR CHAIN TENSIONER **CHT-LP** 12
LINEAR CHAIN TENSIONER **CHT-ASGE** 13
LINEAR CHAIN TENSIONER **CHT-ASGO** 14
LINEAR CHAIN TENSIONER **CHT-ASGA** 15
LINEAR CHAIN TENSIONER **CHT-PAE-PAO** 16

ROTATING TENSIONERS

ASSEMBLY INSTRUCTION **TYPE T** 18
ROTATING TENSIONER **CHT-T** 20
ROTATING CHAIN TENSIONER **CHT-TR CHT-TTN** 21
ROTATING CHAIN TENSIONER **CHT-TGE** 22
ROTATING BELT TENSIONER **CHT-TRU** 23
ASSEMBLY INSTRUCTION **TYPE E** 25
ROTATING TENSIONER **CHT-E** 26
ROTATING TENSIONER **CHT-ER** 27
ROTATING BELT TENSIONER **CHT-ERU** 28
ROTATING CHAIN TENSIONER **CHT-EGE** 29

COMPONENTS

BELT TENSIONER ROLLER **CHT-RU** 30
SLIDING BLOCK TENSIONER **CHT-P** 31
SLIDING BLOCK CHAIN TENSIONER **CHT-GA CHT-GE CHT-GO** 32
REPLACEMENT SLIDING BLOCK CHAIN TENSIONER **ASGA - ASGE - ASGO** 33
CHAIN TENSIONER SPROCKETS **CHT-R** 34
CHAIN TENSIONER SPROCKETS **CHT-TN** 35

ROTATING TENSIONERS TYPE E INOX

ASSEMBLY INSTRUCTION **TYPE E INOX** 37
ROTATING TENSIONER **CHT-E INOX** 38
ROTATING TENSIONER **CHT-ER INOX** 39
ROTATING BELT TENSIONER **CHT-ERU INOX** 40
ROTATING CHAIN TENSIONER **CHT-EGE INOX** 41
BELT TENSIONER ROLLER **CHT-RU INOX** 42
CHAIN TENSIONER SPROCKETS **CHT-R INOX** 43

CATALOGUE UNDER REVIEW
For inquiries write at tensioner@chiaravalli.com

TENSIONERS MADE IN ITALY **BRAND CHT®**

CATALOGUE UNDER REVIEW
For inquiries write at tensioner@chiaravalli.com

TECHNICAL CONSTRUCTION

Chiaravalli Group SpA produces all its automatic tensioners in Italy. Our automatic tensioners keep the tension of the chains and the belts constant. Their automatic tension action improves the performances and increases the duration of the chains and the belts, thus reducing the maintenance on them. Furthermore, the tensioners can also be used as pressers, to keep any item in the desired position in movement on the transport band lines.
The incorporated spring mechanism acts as damper, by absorbing the overloaded and reducing the vibrations.
The reliability and noiseless of our tensioners is possible thanks to the self-lubricating bushing in PTFE and T line rotating tensioner thanks to the sintered bronze bushings.
The quote N is calculated thanks to pressure tests performed in a technical laboratory.
Our tensioners underwent a load check with steady compression method. The pertaining results are published in the tensioner section of our website.
The values shown have a tolerance of ± 5%.

The tensioners are available in a wide variety of models and sizes, they are used in several applications such as agricultural machines, conveyors bands, packaging, bottling and printing machines and industrial applications, where chains or belts are involved.
The high quality of the used materials and the accuracy of the items machining process, make our tensioners, higher quality products, with long-life, capable to withstand heavy loads in any environment. All tensioners with aluminum body/base are black painted through the cataphoresis process.
This process consist of the immersion of the parts with a continue electric current. The deposited film confers to the tensioners aesthetic and anticorrosive characteristics, then prolonging ther life time. The tensioners can be provided as single elements, in linear versions AS and L and rotating T and E, or complete of chain tensioner sprockets, belt tensioner roller or chain tensioner sliding block (in polyethylene UHMW high molecular mass 1.000.000 black).
Different colors are available as option too.
On request, we can provide special tensioners with customized dimensions and loads.

CATALOGUE UNDER REVIEW
For inquiries write at tensioner@chiaravalli.com

LINEAR TENSIONERS BRAND CHT®

CATALOGUE ONLY REVIEW
For inquiries write to tensioner@chiarelli.com

LINEAR TENSIONERS TYPE **CHT-AS**

The automatic tensioners series **CHT-AS** and their relating variants (that you can find in the following pages) keep the tension of the chains or belts constantly tensioned, recovering axially the extension of the same, through multiple compression springs contained inside the basic body.
The structural parts are die-cast high-tensile aluminum body frame painted, by means of the cataphoresis process.
The dry self-lubricating bushings with standard PTFE in all sizes and versions, provide perfect surfaces for the pins sliding, without any wear.
Flexible items and springs elements in steel league, provide a constant tension. The quote N is calculated thanks to pressure tests performed in a technical laboratory.
Our tensioners underwent a load check with steady compression method. The pertaining results are published in the tensioner section of our website.
The values shown have a tolerance of ± 5%.
Simple assemblaging with the possibility to preload the tensioner through the frontal hole.

CATALOGUE UNDER REVIEW
For inquiries write at tensioner@chiaravalli.com

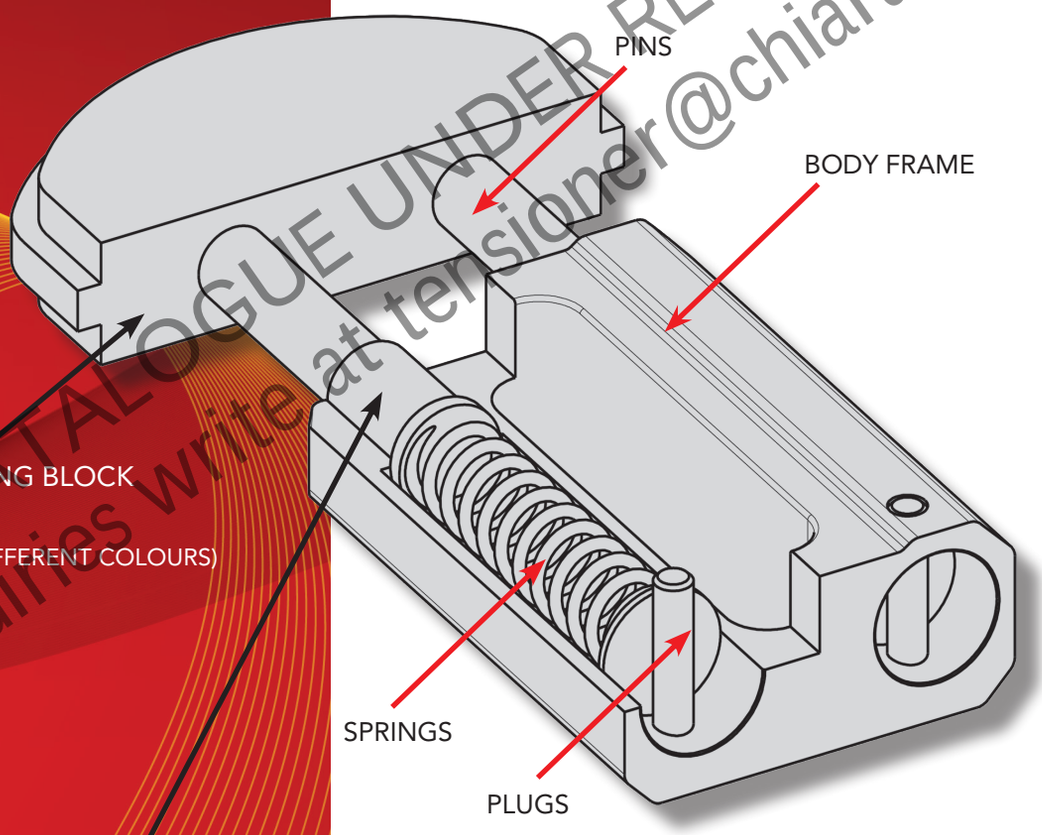

UHMW BLACK SLIDING BLOCK
CHAIN TENSIONER
(ALSO AVAILABLE IN DIFFERENT COLOURS)

SELF-LUBRIFICATED BUSHINGS
STANDARD IN EVERY VERSIONS

TYPE AS - TYPE L

1) Preload the tensioner "A".
2) Compress springs.
3) Insert a pin "B" in the frontal hole, present on the basic frame.
4) Fix the locking screw "C" in the highest slot point to allow, if necessary, the displacement of the tensioner onwards.
5) Pull out the pin "B".

NOTE
In case of irregular surfaces or heavy applications, it is advisable the use of two security screws, to avoid the tensioner rotation.

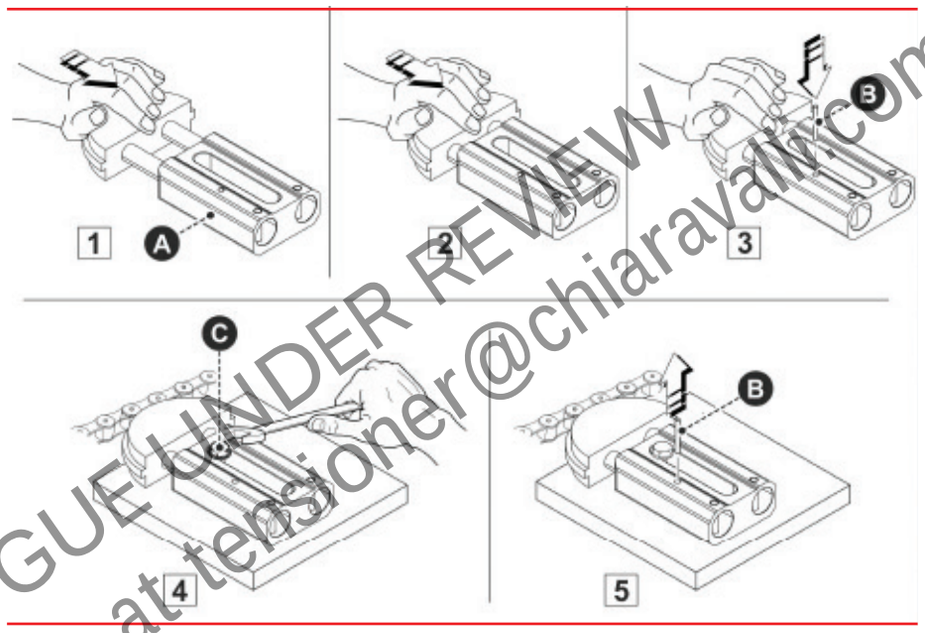

CATALOGUE UNDER REVIEW
For inquiries write at tensioner@chiaravalli.com

- Our tensioner type L is a compact version that allows to get a different tension strength with reduced dimensions.
  This is possible thanks to the possibility to use the same base changing only the head and the springs.
  It is possible to set up chain tensioner sprockets type R or TN or our belt rollers RU.
  High resistence die-cast aluminium body.
- Self-lubricating dry bushings with standard PTFE.
- Available with stainless steel springs, studs, plugs and washers.
- Supplied with closing caps in the bottom part of the tensioner.

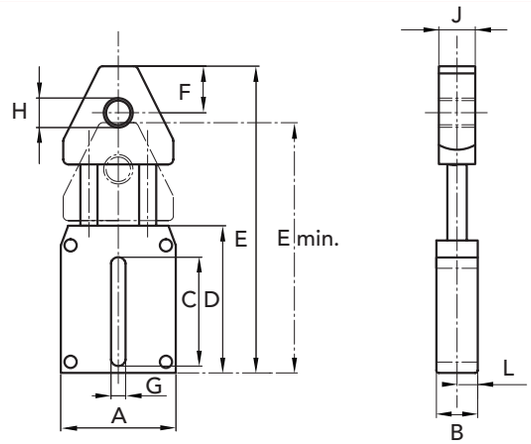

TYPE	P. NUMBER	Newton	A	B	C	D	E	E min.	F	G	H	J	L	M	I	WEIGHT Kg.
L 1	94020001	230	50	23	61	74	143	121	14	10,5	M 12	20	12,5	22	20	0,26
L 2	94020002	350	50	23	61	74	153	130	14	12	M 12	20	12,5	22	20	0,28
L 3	94020003	450	50	23	61	74	164	135	14	12	M 12	20	12,5	22	20	0,32

CATALOGUE UNDER REVIEW
For inquiries write at tensioner@chiaravalli.com

CAD drawings available on our site
www.chiaravalli.com

Quantity, availability and prices on B2B Chiaravalli

CHIARAVALLI GROUP BRAND CHT®
LINEAR TENSIONER CHT - AS

- Tensioner AS with aluminum head to secure accessories
- Dry self-lubricating bushings with standard PTFE
- The quote N is calculated thanks to pressure tests performed in a technical laboratory. The values shown have a tolerance of ± 5%
- On request available with stainless steel pin, springs, plugs and washer

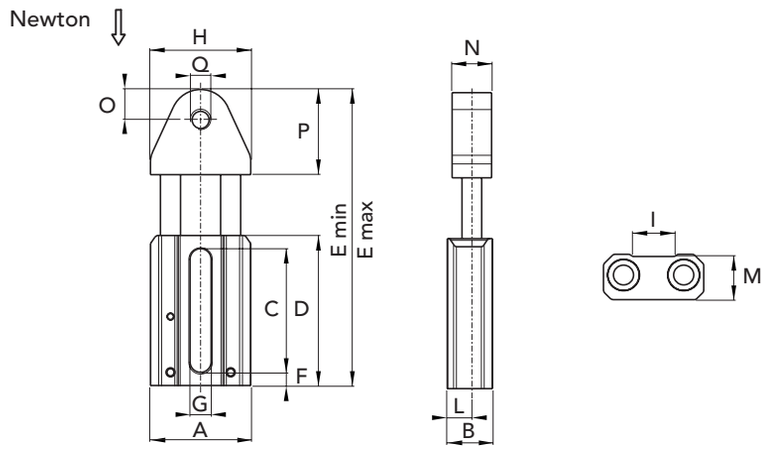

TYPE	P. NUMBER	Newton	A	B	C	D	E min	E max	F	G	H	I	L	M	N	O	P	Q	WEIGHT Kg.
AS1 M8	94021008N	280	50	23	61	74	119	144	6,5	10,5	52	20	12,5	22	20	14	40	M8	0,28
AS1 M10	94021010N	280	50	23	61	74	119	144	6,5	10,5	52	20	12,5	22	20	14	40	M10	0,27
AS1 M12	94021012N	280	50	23	61	74	119	144	6,5	10,5	52	20	12,5	22	20	14	40	M12	0,26
AS1 M16	94021016N	280	50	23	61	74	119	144	6,5	10,5	52	20	12,5	22	20	14	40	M16	0,25
AS2 M12	94022012N	460	67	28	73	87	144	176	7	12,5	67	25	15	25,5	25	12	50	M12	0,52
AS2 M16	94022016N	460	67	28	73	87	144	176	7	12,5	67	25	15	25,5	25	12	50	M16	0,51
AS3 M12	94023012N	690	80	32,5	88	104	172	209	8	14,5	80	29,5	17,5	28,5	30	14	60	M12	0,89
AS3 M14	94023014N	690	80	32,5	88	104	172	209	8	14,5	80	29,5	17,5	28,5	30	14	60	M14	0,88
AS3 M16	94023016N	690	80	32,5	88	104	172	209	8	14,5	80	29,5	17,5	28,5	30	14	60	M16	0,88

CATALOGUE UNDER REVIEW
For inquiries write at tensioner@chiaravalli.com

ON DEMAND

special tensioners with passing rods

TRACTION OPERATION

ON DEMAND

special tensioners with traction operation

CAD drawings available on our site
www.chiaravalli.com

Quantity, availability and prices on B2B Chiaravalli

- Tensioner AS with chain tensioner sprockets TN or R
- Dry self-lubricating bushings with standard PTFE
- The quote N is calculated thanks to pressure tests performed in a technical laboratory. The values shown have a tolerance of ± 5%
- On request available with stainless steel pins, springs, plugs and washers

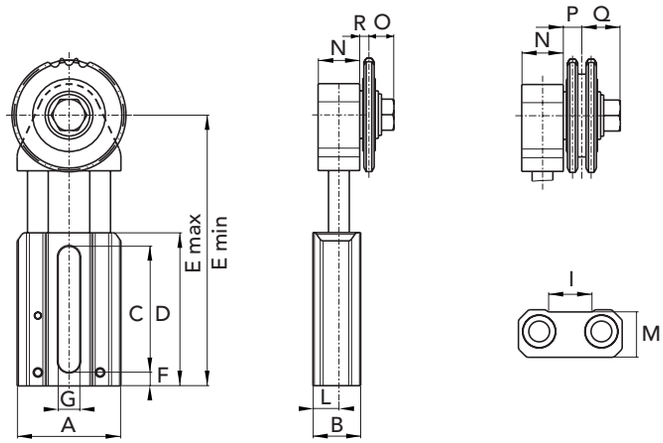

TYPE	P. NUMBER SIMPLE	P. NUMBER DOUBLE	Newton	Step chain	TEETH	A	B	C	D	E min	E max	F	G	I	L	M	N	O	P	Q	R	WEIGHT Kg.
ASR1-3/8"15	94021091	94021092	280	3/8x7/32"	15	50	23	61	74	105	129	6,5	10,5	20	12,5	22	20	11,5	11,7	16,5	6,5	0,45
ASR1-1/2"15	94021121	94021122	280	1/2"x5/16"	15	50	23	61	74	105	129	6,5	10,5	20	12,5	22	20	12,5	14,4	19,4	7,5	0,50
ASR1-5/8"15	94021151	94021152	280	5/8"x3/8"	15	50	23	61	74	105	129	6,5	10,5	20	12,5	22	20	12,5	15,8	20,8	7,5	0,70
ASR2-5/8"15	94022151	94022152	460	5/8"x3/8"	15	67	28	73	87	133	165	7	12,5	25	15	25,5	25	12,5	15,8	20,8	7,5	0,95
ASR2-3/4"15	94022191	94022192	460	3/4"x7/16"	15	67	28	73	87	133	165	7	12,5	25	15	25,5	25	13,5	18,2	23,2	8,5	1,15
ASR3-1"12	94023251	94023252	690	1"x17 mm	12	80	32,5	88	104	154	195	8	14,5	29,5	17,5	28,5	30	16,2	26,8	31,7	11	1,75
ASTN1-3/8"21	940210921	-	280	3/8x7/32"	21	50	23	61	74	105	129	6,5	10,5	20	12,5	22	20	19,7	-	-	9,2	0,47
ASTN1-1/2"16	940211216	-	280	1/2"x5/16"	16	50	23	61	74	105	129	6,5	10,5	20	12,5	22	20	19,7	-	-	9,2	0,49
ASTN1-5/8"17	940211517	-	280	5/8"x3/8"	17	50	23	61	74	105	129	6,5	10,5	20	12,5	22	20	19,7	-	-	9,2	0,68
ASTN2-5/8"17	940221517	-	460	5/8"x3/8"	17	67	28	73	87	133	165	7	12,5	25	15	25,5	25	19,7	-	-	9,2	1,04

CATALOGUE UNDER REVIEW
For inquiries write at tensioner@chiaravalli.com

CAD drawings available on our site
www.chiaravalli.com

Quantity, availability and prices on B2B Chiaravalli

CHIARAVALLI GROUP BRAND CHT®
LINEAR CHAIN TENSIONER CHT - ASFR TN

- Tensioner type ASFR with chain tensioner sprocket type TN
- Standard PTFE dry self- lubricating bushings
- On request available with stainless steel pins, springs, plugs and washers
- It is supplied with the TN sprocket set up screws and bolts
- Lack of encumbrance on the supporting plane for the type ASFR–SV supplied with screw with flared head

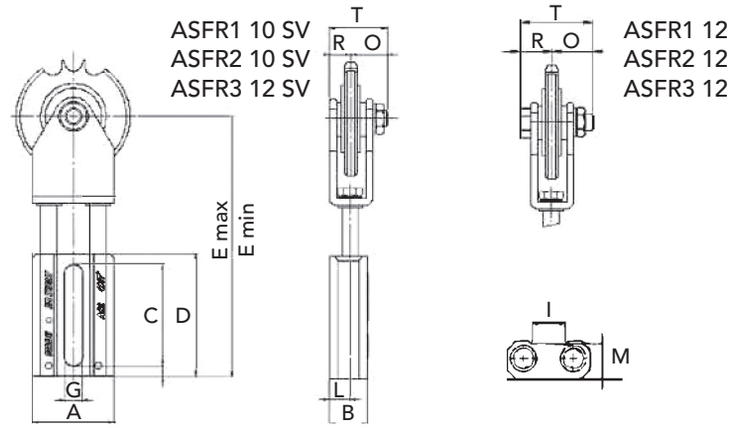

TYPE	P. NUMBER SIMPLE	Newton	A	B	C	D	E min	E max	F	G	I	L	M	O	R	T	WEIGHT Kg.
ASFR1 10 SV	**94ASFR1SV**	240	50	23	61	74	128	157	6,5	10,5	20	12,5	22	22	13	35	0,39
ASFR1 12	**94ASFR112**	240	50	23	61	74	128	157	6,5	10,5	20	12,5	22	27	21	48	0,39
ASFR2 10 SV	**94ASFR2SV**	420	67	28	73	87	157	193	7	12,5	25	15	25,5	22	13	35	0,63
ASFR2 12	**94ASFR212**	420	67	28	73	87	157	193	7	12,5	25	15	25,5	27	21	48	0,63
ASFR3 12 SV	**94ASFR3SV**	650	80	32,5	88	104	181	222	8	14,5	29,5	17,5	28,5	28,7	16,3	45	1,07
ASFR3 12	**94ASFR312**	650	80	32,5	88	104	181	222	8	14,5	29,5	17,5	28,5	26	26	52	1,07

TN chain tensioner sprockets available:

ASFR1: From Z23 chain pitch 8X3 to Z15 chain pitch 5/8" X 3/8" included

ASFR2: From Z14 chain pitch 5/8" x 3/8" to Z15 chain pitch ¾" X 7/16" included

ASFR3: Z 12 chain pitch 1" x 17.02

Check TN list pag. 35

CATALOGUE UNDER REVIEW
For inquiries write at tensioner@chiaravalli.com

ASFR1 10 SV
ASFR2 10 SV
ASFR3 12 SV

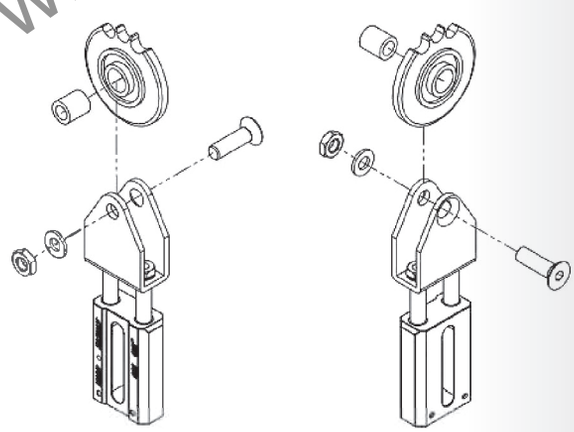

FRONT BACK

CAD drawings available on our site
www.chiaravalli.com

Quantity, availability and prices on B2B Chiaravalli

- AS tensioner with roller belt-tensioner RU
- Dry self-lubricating bushings in standard PTFE
- The quote N is calculated thanks to pressure tests performed in a technical laboratory. The values shown have a tolerance of ± 5%
- On request available with stainless steel pins, springs, plugs and washers

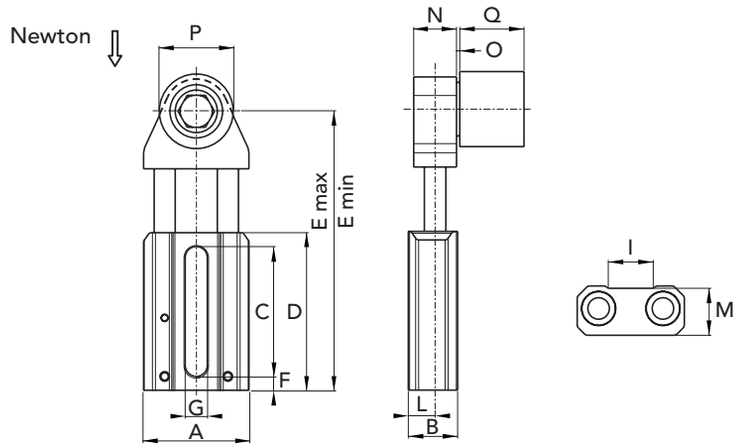

TYPE	P. NUMBER ALUMINUM	P. NUMBER STAINLESS	P. NUMBER POLYAMIDE	Newton	A	B	C	D	E min	E max	F	G	I	L	M	N	O	P	Q
ASRU1-3035	94021035	94021235	94021135	280	50	23	61	74	105	129	6,5	10,5	20	12,5	22	20	2,5	30	35
ASRU1-4045	94021045	94021245	94021145	280	50	23	61	74	105	129	6,5	10,5	20	12,5	22	20	2,5	40	45
ASRU1-5050	94021050	94021250	94021150	280	50	23	61	74	105	129	6,5	10,5	20	12,5	22	20	2,5	50	50
ASRU2-5050	94022050	94022250	94022150	460	67	28	73	87	133	165	7	12,5	25	15	25,5	25	2,5	50	50
ASRU3-5050	94023050	94023250	94023150	690	80	32,5	88	104	154	195	8	14,5	29,5	17,5	28,5	30	2,5	50	50
ASRU3-6060	94023060	94023260	94023160	690	80	32,5	88	104	154	195	8	14,5	29,5	17,5	28,5	30	2,5	60	60

TYPE	WEIGHT kg. ALUMINUM	WEIGHT kg. STAINLESS	WEIGHT kg. POLYAMIDE
ASRU1-3035	0,35	0,40	0,32
ASRU1-4045	0,46	0,59	0,43
ASRU1-5050	0,55	0,86	0,50
ASRU2-5050	0,81	1,13	0,76
ASRU3-5050	1,18	1,48	1,11
ASRU3-6060	1,34	1,95	1,22

ROLLER MATERIAL: POLYAMIDE (PA)
ALUMINUM (AL)
GALVANIZED STEEL (GS)

CAD drawings available on our site
www.chiaravalli.com

Quantity, availability and prices on B2B Chiaravalli

CATALOGUE UNDER REVIEW
For inquiries write at tensioner@chiaravalli.com

CHIARAVALLI GROUP BRAND CHT®
LINEAR CHAIN TENSIONER CHT - LP

- Our tensioner type LP is a compact version that allows to use the same base for chain up to 24B3 changing only the springs and the sliding blocks.
- High molecular weight Polyethylene UHMW sliding blocks(1.000.000) Available on demand in other colours.
- Ellipse profile for a chain larger contact surface.
- Self-lubricating dry bushes with standard PTFE.
- Available with stainless steel springs, studs, plugs and washers. High resistence die-cast aluminium body.
- Supplied with closing caps in the bottom part of the tensioner.

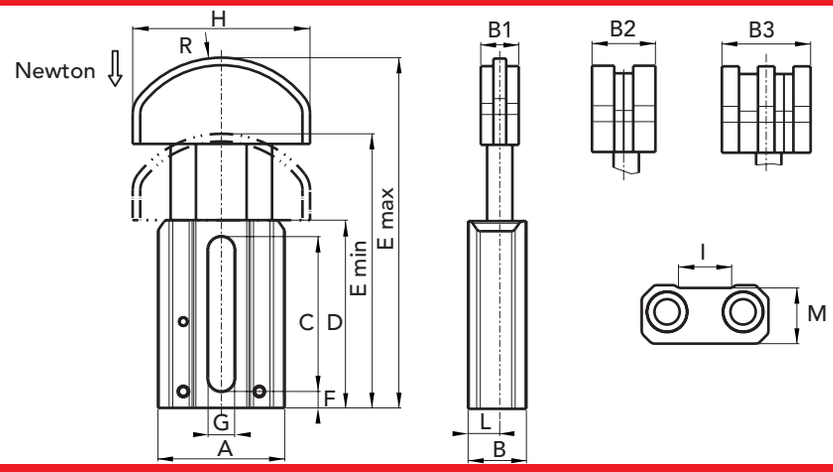

TYPE	P. NUMBER SIMPLE	P. NUMBER DOUBLE	P. NUMBER TRIPLE	Newton	A	B	B1	B2	B3	C	D	E min	E max	F	G	H	I	L	M	R	WEIGHT Kg.
LP 1 3/8"	94010901	94010902	94010903	240	50	23	20	20	25	61	74	114	138	6,5	10,5	68	-0 +2	20	12,5	22	42	0,24
LP 1 1/2"	94011201	94011202	94011203	240	50	23	20	20	35	61	74	114	138	6,5	10,5	68	-0 +2	20	12,5	22	42	0,24
LP 2 5/8"	94011501	94011502	94011503	350	50	23	20	25	40	61	74	120	142	6,5	12	85	-0 +2	20	12,5	22	50	0,25
LP 2 3/4"	94011901	94011902	94011903	350	50	23	20	30	49	61	74	120	142	6,5	12	85	-0 +2	20	12,5	22	50	0,25
LP 3 1"	94012501	94012502	94012503	450	50	23	20	45	78	61	74	118	148	6,5	12	100	-0 +2	20	12,5	22	58	0,27
LP 3 1"1/4	94013101	94013102	94013103	450	50	23	20	54	90	61	74	118	148	6,5	12	100	-0 +2	20	12,5	22	58	0,27
LP 3 1"1/2	94013801	94013802	94013803	450	50	23	20	70	119	61	74	118	148	6,5	12	100	-0 +2	20	12,5	22	58	0,27

CATALOGUE UNDER REVIEW
For inquiries write at tensioner@chiaravalli.com

CAD drawings available on our site
www.chiaravalli.com

Quantity, availability and prices on B2B Chiaravalli

- Tensioner AS with sliding block chain tensioner in polyethylene UHMW high molecular mass (1.000.000) material
- Available on request in other colors
- Elliptical profile to increase contact surface
- Dry self-lubricating bushings in standard PTFE
- The quote N is calculated thanks to pressure tests performed in a technical laboratory. The values shown have a tolerance of ± 5%
- On request available with stainless steel pins, springs, plugs and washers

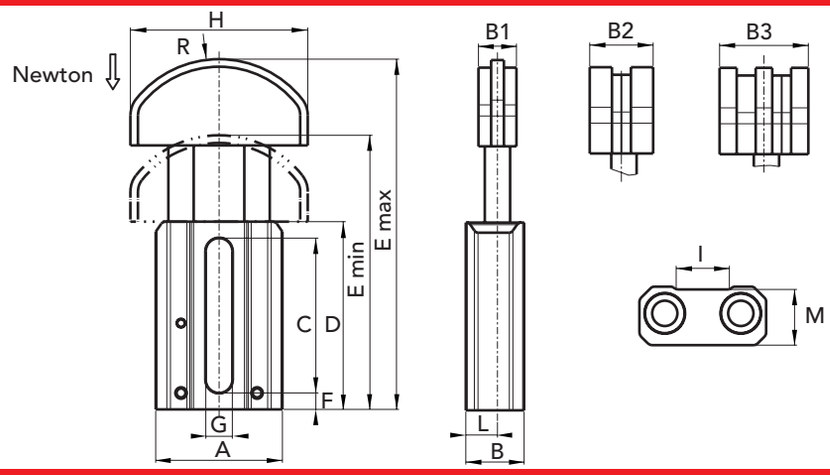

TYPE	P. NUMBER SIMPLE	P. NUMBER DOUBLE	P. NUMBER TRIPLE	Newton	Step Chain	A	B	B1	B2	B3	C	D	E min	E max	F	G	H	I	L	M	R	WEIGHT Kg.
ASGE1 - 3/8"	94000901N	94000902N	94000903N	280	3/8x7/32"	50	23	20	20	25	61	74	114	138	6,5	10,5	68 $^{-0}_{+2}$	20	12,5	22	42	0,24
ASGE1 - 1/2"	94001201N	94001202N	94001203N	280	1/2"x5/16"	50	23	20	20	35	61	74	114	138	6,5	10,5	68 $^{-0}_{+2}$	20	12,5	22	42	0,24
ASGE1 - 5/8"	94001501N	94001502N	94001503N	280	5/8"x3/8"	50	23	20	25	40	61	74	114	138	6,5	10,5	68 $^{-0}_{+2}$	20	12,5	22	42	0,24
ASGE2 - 5/8"	94001511N	94001512N	94001513N	460	5/8"x3/8"	67	28	20	25	40	73	87	138	170	7	12,5	88 $^{-0}_{+2}$	25	15	25,5	54	0,44
ASGE2 - 3/4"	94001911N	94001912N	94001913N	460	3/4"x7/16"	67	28	20	30	49	73	87	138	170	7	12,5	88 $^{-0}_{+2}$	25	15	25,5	54	0,45
ASGE2 - 1"	94002501N	94002502N	-	460	1"x17 mm	67	28	25	45	-	73	87	138	170	7	12,5	88 $^{-0}_{+2}$	25	15	25,5	54	0,46
ASGE3 - 1"	94002511N	94002512N	94002513N	690	1"x17 mm	80	32,5	25	45	78	88	104	166	202	8	14,5	108 $^{-0}_{+2}$	29,5	17,5	28,5	66	0,75
ASGE3 - 1"1/4	94003101N	94003102N	94003103N	690	1"1/4x3/4"	80	32,5	25	54	90	88	104	166	202	8	14,5	108 $^{-0}_{+2}$	29,5	17,5	28,5	66	0,75
ASGE3 - 1"1/2	94003801N	94003802N	94003803N	690	1"1/2x1"	80	32,5	25	71	119	88	104	166	202	8	14,5	108 $^{-0}_{+2}$	29,5	17,5	28,5	66	0,75
ASGE3 - 1"3/4	94004401N	-	-	690	1"3/4x1"1/4	80	32,5	30	-	-	88	104	166	202	8	14,5	108 $^{-0}_{+2}$	29,5	17,5	28,5	66	0,80
ASGE3 - 2"	94005001N	-	-	690	2"x1"1/4	80	32,5	30	-	-	88	104	166	202	8	14,5	108 $^{-0}_{+2}$	29,5	17,5	28,5	66	0,80

CATALOGUE UNDER REVIEW
For inquiries write at tensioner@chiaravalli.com

CAD drawings available on our site
www.chiaravalli.com

Quantity, availability and prices on B2B Chiaravalli

CHIARAVALLI GROUP BRAND CHT®
LINEAR CHAIN TENSIONER CHT - ASGO

- Tensioner AS with sliding block chain tensioner polyethylene UHMW high molecular mass (1.000.000) material
- Available on request in other colors
- Sliding block with semicircle profile
- Dry self-lubricating bushings with standard PTFE
- The quote N is calculated thanks to pressure tests performed in a technical laboratory. The values shown have a tolerance of ± 5%
- On request available with stainless steel pin, springs, plugs and washer

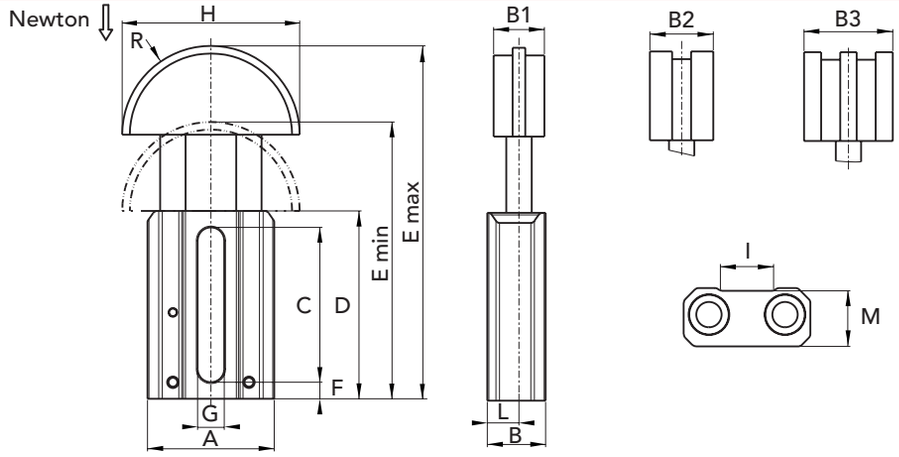

TYPE	P. NUMBER SIMPLE	P. NUMBER DOUBLE	P. NUMBER TRIPLI	Newton	Step Chain	A	B	B1	B2	B3	C	D	E min	E max	F	G	H	I	L	M	R	WEIGHT Kg.
ASGO1 - 3/8"	94100901N	94100902N	94100903N	280	3/8x7/32"	50	23	20	20	25	61	74	114	138	6,5	10,5	70	20	12,5	22	35	0,24
ASGO1 - 1/2"	94101201N	94101202N	94101203N	280	1/2"x5/16"	50	23	20	20	35	61	74	114	138	6,5	10,5	70	20	12,5	22	35	0,24
ASGO1 - 5/8"	94101501N	94101502N	94101503N	280	5/8"x3/8"	50	23	20	25	40	61	74	114	138	6,5	10,5	70	20	12,5	22	35	0,24
ASGO2 - 5/8"	94101511N	94101512N	94101513N	460	5/8"x3/8"	67	28	20	25	40	73	87	138	170	7	12,5	90	25	15	25,5	45	0,42
ASGO2 - 3/4"	94101901N	94101902N	94101903N	460	3/4"x7/16"	67	28	20	30	49	73	87	138	170	7	12,5	90	25	15	25,5	45	0,42
ASGO2 - 1"	94102501N	94102502N	94102503N	460	1"x17 mm	67	28	25	45	-	73	87	138	170	7	12,5	90	25	15	25,5	45	0,42
ASGO3 - 1"	94102511N	94102512N	94102513N	690	1"x17 mm	80	32,5	25	45	78	88	104	168	202	8	14,5	110	29,5	17,5	28,5	55	0,74
ASGO3 - 1"1/4	94103101N	94103102N	94103103N	690	1"1/4x3/4"	80	32,5	25	54	90	88	104	168	202	8	14,5	110	29,5	17,5	28,5	55	0,74
ASGO3 - 1"1/2	94103801N	94103802N	94103803N	690	1"1/2x1"	80	32,5	25	71	119	88	104	168	202	8	14,5	110	29,5	17,5	28,5	55	0,74
ASGO3 - 1"3/4	94104401N	-	-	690	1"3/4x1"1/4	80	32,5	30	-	-	88	104	168	202	8	14,5	110	29,5	17,5	28,5	55	0,79
ASGO3 - 2"	94105001N	-	-	690	2"x1"1/4	80	32,5	30	-	-	88	104	168	202	8	14,5	110	29,5	17,5	28,5	55	0,79

CATALOGUE UNDER REVIEW
For inquiries write at tensioner@chiaravalli.com

CAD drawings available on our site
www.chiaravalli.com

Quantity, availability and prices on B2B Chiaravalli

- Tensioner T with sliding block chain tensioner polyethylene UHMW high molecular mass (1.000.000) material Available in other colors
- Arch profile for long chain sections
- Dry self-lubricating bushings with standard PTFE
- The quote N is calculated thanks to pressure tests performed in a technical laboratory. The values shown have a tolerance of ± 5%
- On request available with stainless steel pins, springs, plugs and washers

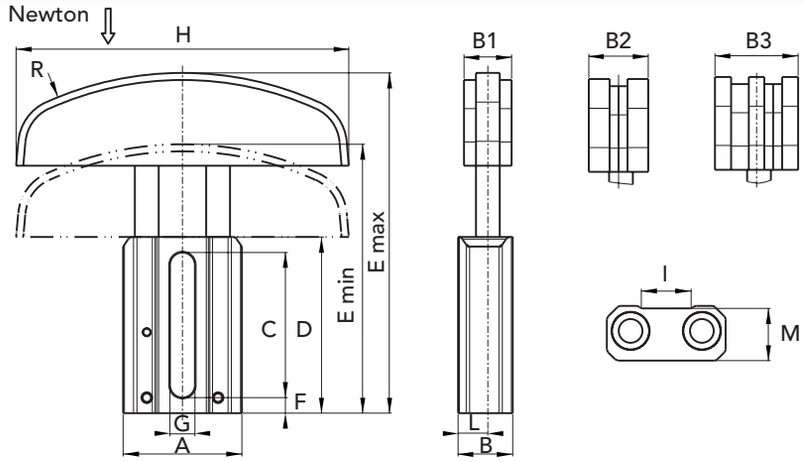

TYPE	P. NUMBER SIMPLE	P. NUMBER DOUBLE	P. NUMBER TRIPLE	Newton	Step Chain	A	B	B1	B2	B3	C	D	E min	E max	F	G	H	I	L	M	R	WEIGHT Kg.
ASGA1 - 3/8"	94200901N	94200902N	94200903N	280	3/8x7/32"	50	23	20	20	25	61	74	119	143	6,5	10,5	140	20	12,5	22	120	0,26
ASGA1 - 1/2"	94201201N	94201202N	94201203N	280	1/2"x5/16"	50	23	20	20	35	61	74	119	143	6,5	10,5	140	20	12,5	22	120	0,26
ASGA1 - 5/8"	94201501N	94201502N	94201503N	280	5/8"x3/8"	50	23	20	25	40	61	74	119	143	6,5	10,5	140	20	12,5	22	120	0,26
ASGA2 - 5/8"	94201511N	94201512N	94201513N	460	5/8"x3/8"	67	28	20	25	40	73	87	132	164	7	12,5	140	25	15	25,5	140	0,48
ASGA2 - 3/4"	94201901N	94201902N	94201903N	460	3/4"xx7/16"	67	28	20	30	49	73	87	132	164	7	12,5	140	25	15	25,5	140	0,50
ASGA3 - 1"	94202511N	94202512N	94202513N	690	1"x17 mm	80	32,5	25	45	78	88	104	152	187	8	14,5	140	29,5	17,5	28,5	160	0,74
ASGA3 - 1"1/4	94203101N	94203102N	94203103N	690	1"1/4x3/4"	80	32,5	25	54	90	88	104	152	187	8	14,5	140	29,5	17,5	28,5	160	0,74
ASGA3 - 1"1/2	94203801N	94203802N	94203803N	690	1"1/2x1"	80	32,5	25	71	119	88	104	152	187	8	14,5	140	29,5	17,5	28,5	160	0,74
ASGA3 - 1"3/4	94204401N	-	-	690	1"3/4x1"1/4	80	32,5	30	-	-	88	104	152	187	8	14,5	140	29,5	17,5	28,5	160	0,79
ASGA3 - 2"	94205001N	-	-	690	2"x1"1/4	80	32,5	30	-	-	88	104	152	187	8	14,5	140	29,5	17,5	28,5	160	0,79

CATALOGUE UNDER REVIEW
For inquiries write at tensioner@chiaravalli.com

CAD drawings available on our site
www.chiaravalli.com

Quantity, availability and prices on B2B Chiaravalli

CHIARAVALLI GROUP BRAND **CHT®**
LINEAR CHAIN TENSIONER IN POLYAMIDE **CHT - PAE - PAO**

- Tensioner element CHT-PA with high molecular mass polyethylene sliding block set up on the body pins
- Sliding block available in other colours
- Material of the body polyamide 66 FV 50
- Available on demand with stainless steel pins, springs, plugs and washers (PA1 SS).

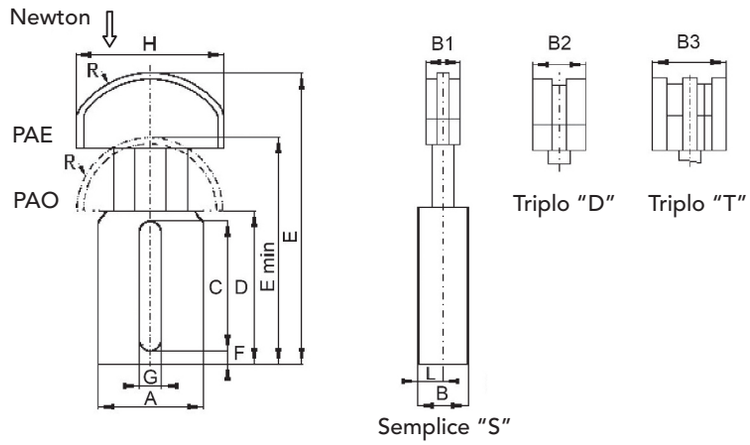

TYPE	P. NUMBER SIMPLE	P. NUMBER DOUBLE	P. NUMBER TRIPLE	Step chain	Newton	A	B	C	D	E	E min	F	G	H	L	B1	B2	B3	R	Weight Kg.
PAE 1	**94PAE138S**	**94PAE138D**	**94PAE138T**	3/8"	210	60	25	56	76	140	110	4	8,5	70	12,5	20	20	25	42	0,21
PAO 1	**94PAO138S**	**94PAO138D**	**94PAO138T**	3/8"	210	60	25	56	76	140	110	4	8,5	70	12,5	20	20	26	35	0,21
PAE 1	**94PAE112S**	**94PAE112D**	**94PAE112T**	1/2"	210	60	25	56	76	140	110	4	8,5	70	12,5	20	20	35	42	0,21
PAO 1	**94PAO112S**	**94PAO112D**	**94PAO112T**	1/2"	210	60	25	56	76	140	110	4	8,5	70	12,5	20	20	34,5	35	0,21
PAE 1	**94PAE158S**	**94PAE158D**	**94PAE158T**	5/8"	210	60	25	56	76	140	110	4	8,5	70	12,5	20	25	40	50	0,21
PAO 1	**94PAO158S**	**94PAO158D**	**94PAO158T**	5/8"	210	60	25	56	76	140	110	4	8,5	70	12,5	20	25	41,5	35	0,21

CATALOGUE UNDER REVIEW
For inquiries write at tensioner@chiaravalli.com

CAD drawings available on our site
www.chiaravalli.com

Quantity, availability and prices on B2B Chiaravalli

ROTATING TENSIONER **BRAND CHT®**

CATALOGUE UNDER REVIEW
For inquiries write at tensioner@chiaravalli.com

TYPE T

1) Loosen slightly fixing screw "A", that can be fixed on both sides.
2) Rotate the tensioner "B" in the desired direction with a spanner of 24 mm, situated on the central hexagon.
3) Stop the screw "A".

NOTE
In case of irregular surfaces or heavy applications, it is advisable to use an any rotation pin, to be inserted in one of the two hollows present on the back side of the tensioner base.

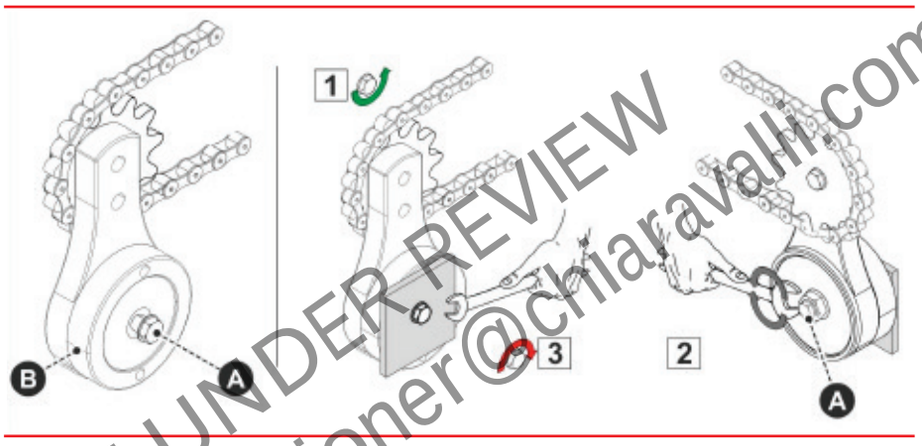

CATALOGUE UNDER REVIEW
For inquiries write at tensioner@chiaravalli.com

The automatic tensioners series **CHT-T** and their relating variants (that you can find in the following pages) keep constant tension of the chains or belts constantly tensioned.
The two structural body parts are die-cast high-tensile aluminum beads pointed of black, by means of the cataphoresis process.
The bronze self-lubricating bushings, standard sintered, on all sizes versions, provide perfect surfaces for the lever movement around the pin, without wear points.
Flexible items and springs elements in steel league provide a constant tension. The springs are lubricated with grease to assure duration and silent operations.
Simple assembling through a single screw, that can be assembled on both sides.
Frame adjustment provided for an easy and fast tension adjustment, by means of holes.
The body frame is provided with arm and two adjustments holes for a wide tension.

CATALOGUE UNDER REVIEW
For inquiries write at tensioner@chiaravalli.com

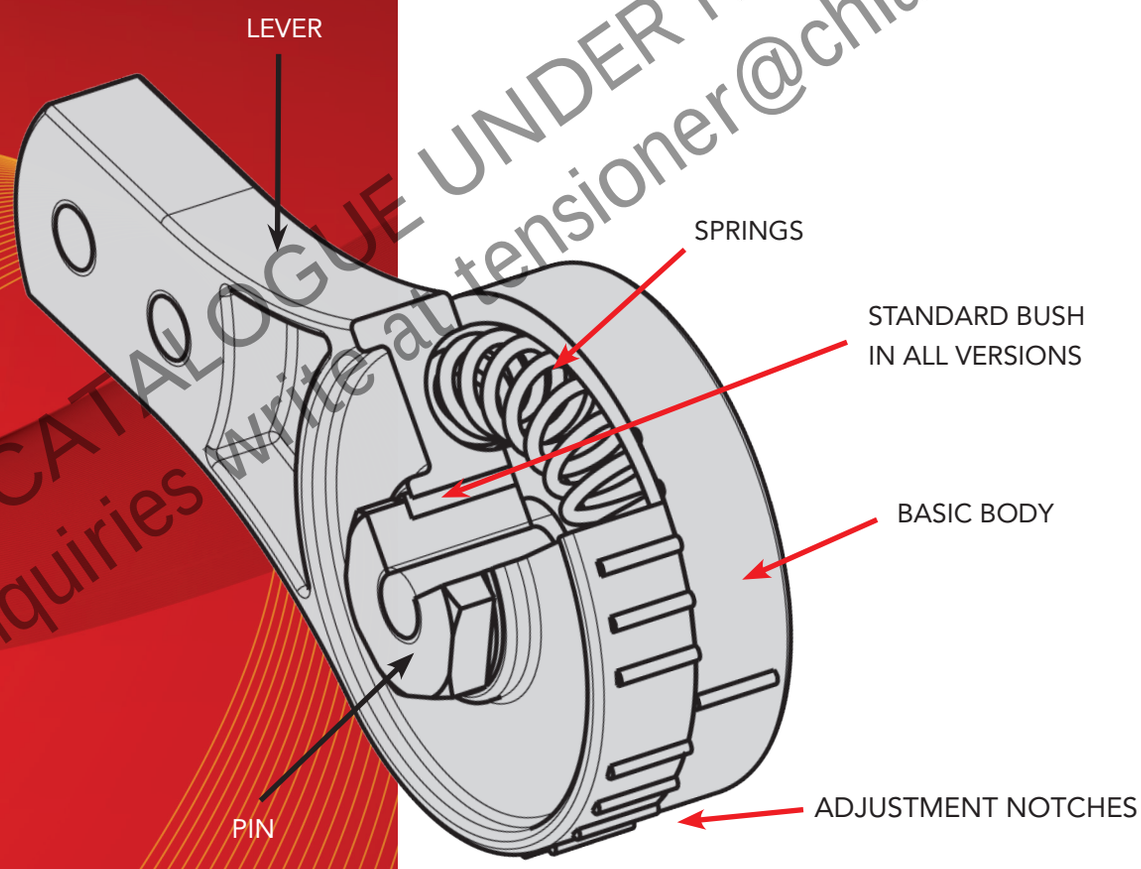

CHIARAVALLI GROUP BRAND CHT®
ROTATING TENSIONER CHT-T

- Tensioner mod. T with two holes for the accessories fixing
- Bronze self-lubricating sintered bushings
- On request available with stainless steel pin and springs

VERSION T1

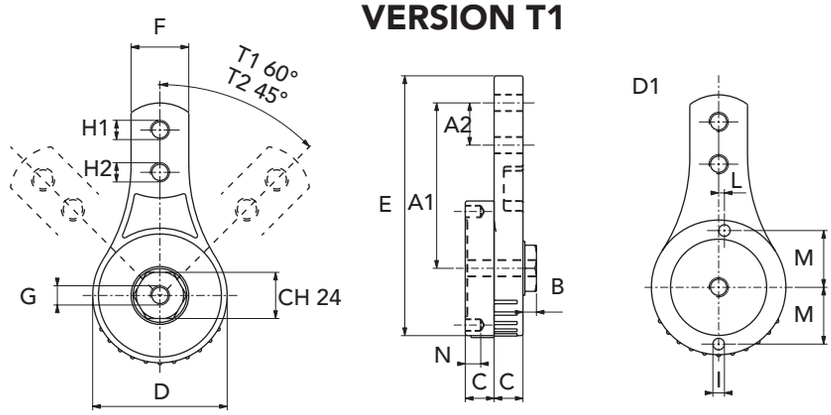

TYPE	P. NUMBER	Newton H1	Newton H2	A1	A2	B	C	D	E	F	G	H1	H2	I	L	M	N	WEIGHT Kg.
T1 8.5	94030108N	180	250	86	22	7	15	70	135	30	M10	8,5	8,5	6	3	29,5	8	0,36
T1 10	94030110N	180	250	86	22	7	15	70	135	30	M10	M10	M10	6	3	29,5	8	0,36
T1 10.5	94030111N	180	250	86	22	7	15	70	135	30	M10	10,5	10,5	6	3	29,5	8	0,36
T1 12	94030112N	180	250	86	22	7	15	70	135	30	M10	M12	M12	6	3	29,5	8	0,34
T1 16	94030116N	180	250	86	22	7	15	70	135	30	M10	M16	M16	6	3	29,5	8	0,30
T2 8.5	94030208N	340	440	100	22	7	18	90	160	35	M12	8,5	8,5	8	-	37,5	10	0,62
T2 10.5	94030211N	340	440	100	22	7	18	90	160	35	M12	10,5	10,5	8	-	37,5	10	0,62
T2 12	94030212N	340	440	100	22	7	18	90	160	35	M12	M12	M12	8	-	37,5	10	0,62
T2 16	94030216N	340	440	100	22	7	18	90	160	35	M12	M16	M16	8	-	37,5	10	0,60
T2 20	94030220N	340	440	100	22	7	18	90	160	35	M12	M20	M20	8	-	37,5	10	0,58

VERSION T2

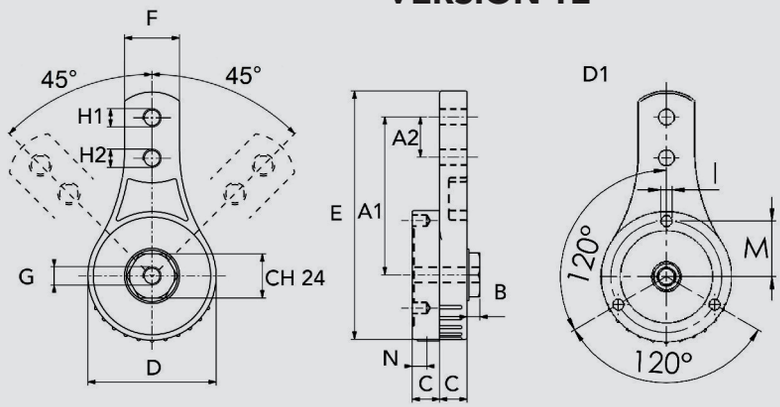

CATALOGUE UNDER REVIEW
For inquiries write at tensioner@chiaravalli.com

CAD drawings available on our site
www.chiaravalli.com

Quantity, availability and prices on B2B Chiaravalli

Chain Tensioner CHT - TTN

- Tensioner mod. T with sprocket chain tensioner TN (simple)
- Bronze self-lubricating sintered bushings
- On request version with stainless steel pin and springs

Chain Tensioner CHT - TR

- Tensioner T with sprocket chain tensioner R (simple, duplex, triplex)
- Standard sintered bronze self-lubricating bushings
- On request available with stainless steel pin and springs

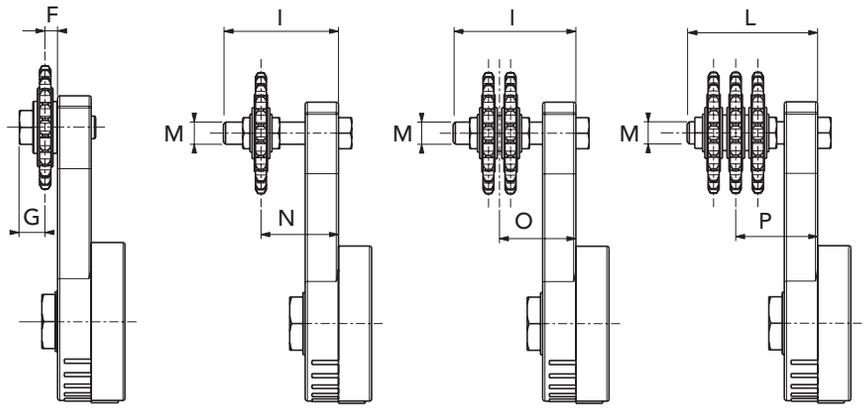

CHT - TTN | CHT - TR Simple | CHT - TR Douple B2 | CHT - TR Triple B3

CHT - TTN

TYPE	P. NUMBER	STEP CHAIN	Z TEETH	F	G	M	WEIGHT Kg.
TTN1-3/8	94030921	3/8"X 7/32"	21	9,2	19,2	M12	0,55
TTN1-1/2	94031216	1/2"X5/16"	16	9,2	19,2	M12	0,57
TTN1-5/8	94031517	5/8"X3/8"	17	9,2	19,2	M12	0,76
TTN2-5/8	94031518	5/8"X3/8"	17	9,2	19,2	M12	1,04
TTN2-3/4	94031915	3/4"X7/16"	15	9,2	19,2	M12	1,15
TTN2-1	94032512	1"X17mm	12	8,9	19	M12	1,45

CHT - TR

TYPE	P. NUMBER SIMPLE	P. NUMBER DOUBLE	P. NUMBER TRIPLE	STEP CHAIN	Z TEETH	I	L	M	N	O	P	WEIGHT Kg.
TR1-3/8	94030901	94030902	94030903	3/8"X 7/32"	15	60	80	M10	40-63	48-57	53-72	0,50
TR1-1/2	94031201	94031202	94031203	1/2"X5/16"	15	60	80	M12	40-63	50-55	57-68	0,55
TR1-5/8	94031501	94031502	94031503	5/8"X3/8"	15	80	80	M12	40-80	54-71	60-65	0,70
TR2-5/8	94031511	94031512	94031513	5/8"X3/8"	15	80	80	M12	46-84	59-82	68-84	0,97
TR2-3/4	94031901	94031902	94031903	3/4"X7/16"	15	80	100	M12	46-84	59-82	68-84	1,25
TR2-1	94032501	94032502		1"X17mm	12	100	-	M12	51-98	65-98	-	1,55

CATALOGUE UNDER REVIEW
For inquiries write at tensioner@chiaravalli.com

CAD drawings available on our site
www.chiaravalli.com

Quantity, availability and prices on B2B Chiaravalli

Chain Tensioner CHT - TGE

- Tensioner mod. T with sliding block chain tensioner in polyethylene UHMW high molecular mass (1.000.000) material Available in other colors
- Provided with bushing kit that allow the free movement of the sliding block
- Standard sintered bronze self-lubricating bushings
- On request available with stainless steel pin and springs

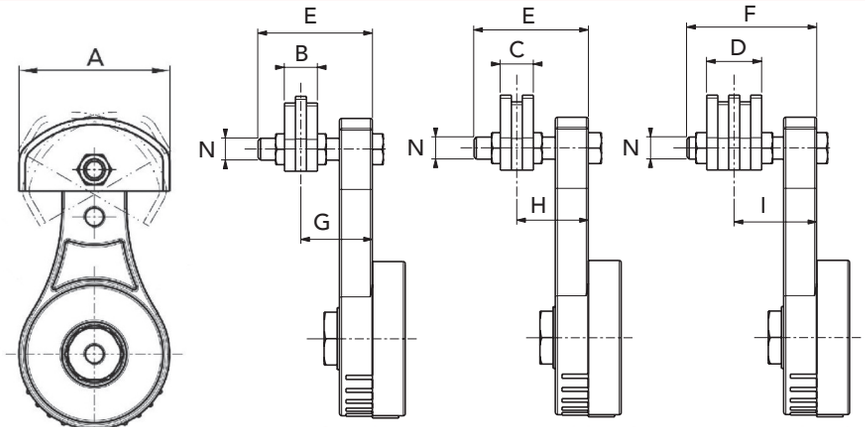

Simple **B1** Double **B2** Triple **B3**

TYPE	P. NUMBER SIMPLE	P. NUMBER DOUBLE	P. NUMBER TRIPLE	STEP CHAIN	A	B	C	D	E	F	G	H	I	N	WEIGHT Kg.
TGE1-3/8	94030901P	94030902P	94030903P	3/8"x 7/32"	68 $^{-0}_{+2}$	20	20	25	60	80	40-58	40-58	43-75	M12	0,47
TGE1-1/2	94031201P	94031202P	94031203P	1/2"x5/16"	68 $^{-0}_{+2}$	20	20	35	60	80	40-58	40-58	48-70	M12	0,47
TGE1-5/8	94031501P	94031502P	94031503P	5/8"x3/8"	88 $^{-0}_{+2}$	20	25	40	80	80	40-78	43-75	50-68	M12	0,47
TGE2-5/8	94031511P	94031512P	94031513P	5/8"x3/8"	88 $^{-0}_{+2}$	20	25	40	80	80	46-81	49-78	57-90	M12	0,76
TGE2-3/4	94031901P	94031902P	94031903P	3/4"x7/16"	108 $^{-0}_{+2}$	20	30	49	80	100	46-81	51-76	61-86	M12	0,76
TGE2-1	94032501P	94032502P	94032503P	1"x17mm	108 $^{-0}_{+2}$	25	45	-	100	-	46-100	59-88	-	M12	0,76

See sliding block on page 32

CATALOGUE UNDER REVIEW
For inquiries write at tensioner@chiaravalli.com

CAD drawings available on our site
www.chiaravalli.com

Quantity, availability and prices on B2B Chiaravalli

Rotating Belt Tensioner CHT-TRU

- Tensioner mod. T with chain tensioner roller RU
- Bronze self-lubricating sintered bushings
- On request available with stainless steel pin and springs

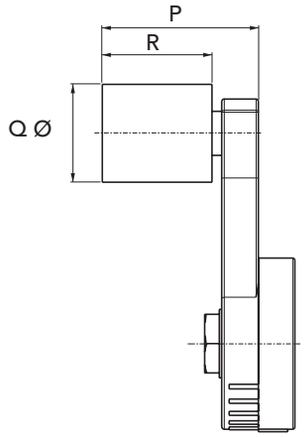

TYPE	P. NUMBER STAINLESS	P. NUMBER ALUMINUM	P. NUMBER POLYAMIDE	P	Q Ø	R	WEIGHT Kg. STAINLESS	WEIGHT Kg. AL.	WEIGHT Kg. PA
TRU1 - 3035	94031235	94031035	94031135	53	30	35	0,51	0,45	0,43
TRU1 - 4045	94031245	94031045	94031145	66	40	45	0,70	0,57	0,53
TRU1 - 5050	94031250	94031050	94031150	67	50	50	0,97	0,65	0,59
TRU2 - 5050	94032250	94032050	94032150	70	50	50	1,22	0,90	0,84
TRU2 - 6060	94032260	94032060	94032160	80	60	60	1,69	1,06	0,94

CATALOGUE UNDER REVIEW
For inquiries write at tensioner@chiaravalli.com

CAD drawings available on our site
www.chiaravalli.com

Quantity, availability and prices on B2B Chiaravalli

ROTATING TENSIONER **BRAND CHT®**

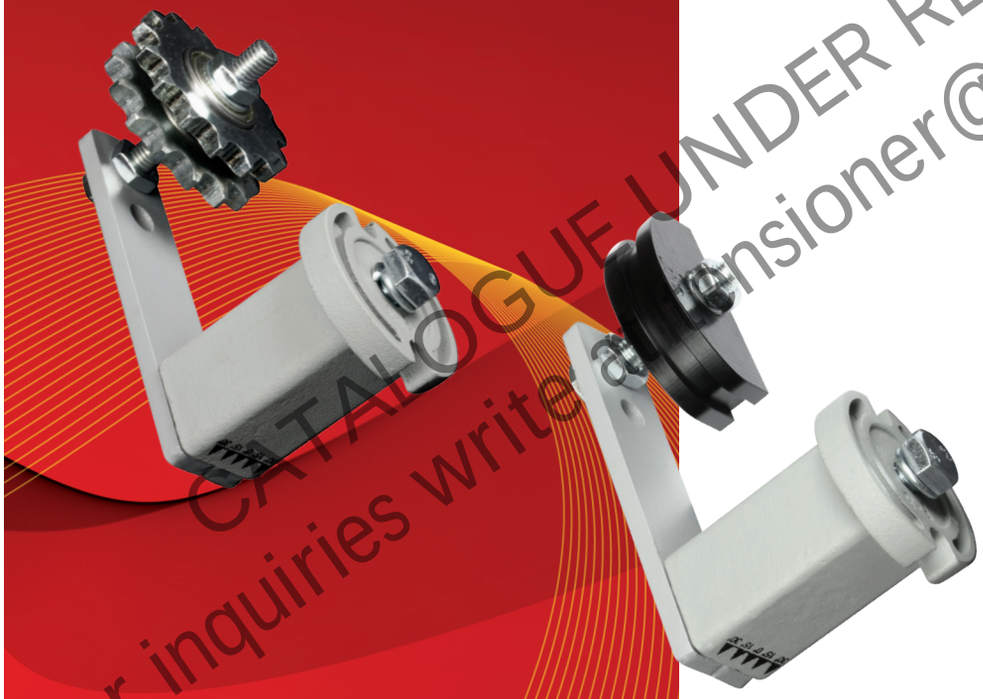

CATALOGUE UNDER REVIEW
For inquiries write at tensioner@chiaravalli.com

TYPE E

1) Loosen the fixing screw "A" slightly with the first spanner.
2) Rotate the tensioner "B" in the desired direction with a second spanner, placed on basic body square
3) Tighten the screw "A".

NOTE
In case of irregular surfaces or heavy applications, it is advisable to use two securing screws, to avoid the tensioner rotation.

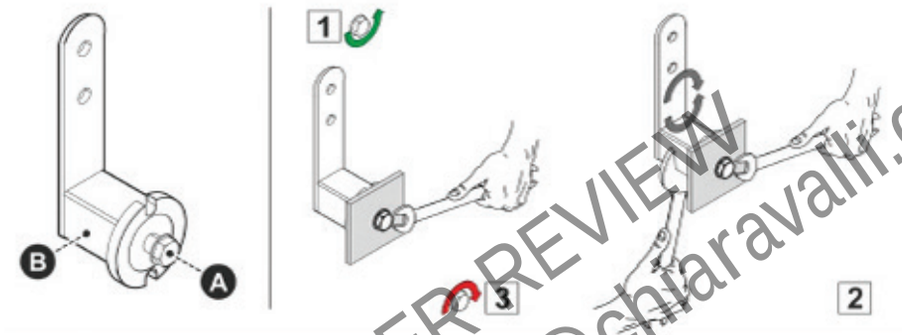

STANDARD VERSION

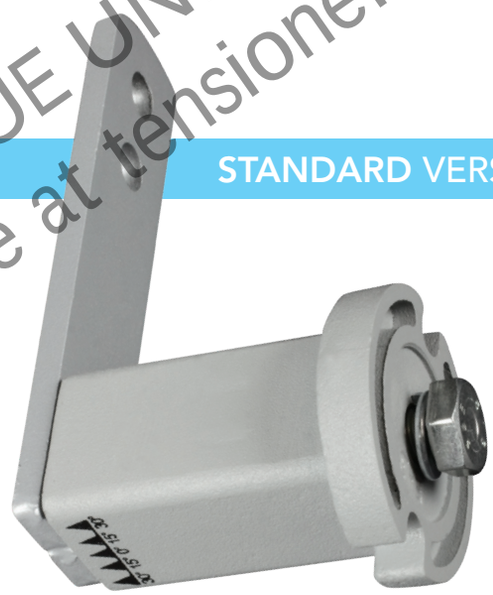

ON DEMAND
AVAILABLE WITH FRONT SET UP

CATALOGUE UNDER REVIEW
For inquiries write at tensioner@chiaravalli.com

CHIARAVALLI GROUP BRAND CHT®
ROTATING TENSIONER CHT - E

- Tensioner E with two holes for fixing accessories
- Flexible rubber items
- Supplied with set up bolts

*** ON DEMAND AVAILABLE WITH FRONT SET UP**

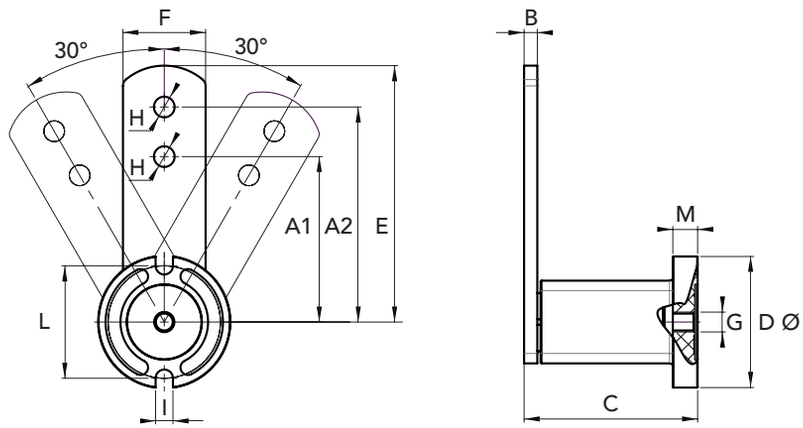

TYPE	P. NUMBER	Newton A2	Newton A1	A1	A2	B	C	D Ø	E	F	G	H	I	L	M	WEIGHT Kg.
E 1	94070001	0 - 90	0 - 110	60	80	5	50	35	90	20	M6	8,5	7	31	6	0,18
E 2	94070002	0 - 130	0 - 160	80	100	5	63	45	112,5	30	M8	10,5	9	41	8	0,35
E 3	94070003	0 - 330	0 - 410	80	100	6	77	59	115	35	M10	10,5	9	48	10	0,60
E 4	94070004	0 - 800	0 - 1000	100	130	8	107	79	155	50	M12	12,5	11	63	15	1,90
E 5	94070005	0 - 1500	0 - 1850	140	175	10	139	98	205	60	M16	20,5	13	84	15	3,80
E 6	94070006	0 - 2500	0 - 3100	180	225	12	199	118	260	70	M20	20,5	13	100	18	6,50
E 7	94070007	0 - 3800	0 - 4800	200	250	20	210	128	290	80	M24	20,5	17	107	20	9,00
E 1	94070001MF	0 - 90	0 - 110	60	80	5	50	35	90	20	M6	8,5	7	31	6	0,18
E 2	94070002MF	0 - 130	0 - 160	80	100	5	63	45	112,5	30	M8	10,5	9	41	8	0,35
E 3	94070003MF	0 - 330	0 - 410	80	100	6	77	59	115	35	M10	10,5	9	48	10	0,60
E 4	94070004MF	0 - 800	0 - 1000	100	130	8	107	79	155	50	M12	12,5	11	63	15	1,90
E 5	94070005MF	0 - 1500	0 - 1850	140	175	10	139	98	205	60	M16	20,5	13	84	15	3,80
E 6	94070006MF	0 - 2500	0 - 3100	180	225	12	199	118	260	70	M20	20,5	13	100	18	6,50
E 7	94070007MF	0 - 3800	0 - 4800	200	250	20	210	128	290	80	M24	20,5	17	107	20	9,00

FRONT SET UP

CATALOGUE UNDER REVIEW
For inquiries write at tensioner@chiaravalli.com

CAD drawings available on our site
www.chiaravalli.com

Quantity, availability and prices on B2B Chiaravalli

- Tensioner E with chain tensioner sprocket R (simple, double, triple)
- Flexible rubber items
- Supplied with set up bolts

*** ON DEMAND AVAILABLE WITH FRONT SET UP**

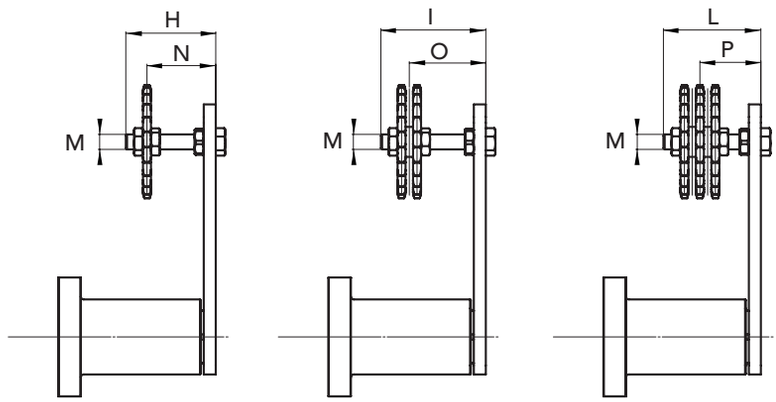

Simple **B1** Double **B2** Triple **B3**

TYPE	P. NUMBER SIMPLE	P. NUMBER DOUBLE	P. NUMBER TRIPLE	Step Chain	H	I	L	M	N	O	P	WEIGHT Kg.
ER 2 - 3/8	94070921	94070922	-	3/8x7/32"	55	55	-	M10	22-43	27-39	-	0,48
ER 3 - 3/8	94070931	94070932	94070933	3/8x7/32"	55	60	70	M10	23-43	28-39	33-48	0,73
ER 3 - 1/2	94071231	94071232	-	1/2"x5/16"	55	60	-	M10	23-44	30-37	-	0,81
ER 4 - 1/2	-	-	94071243	1/2"x5/16"	-	-	80	M12	-	-	41-51	2,50
ER 4 - 5/8	94071541	94071542	94071543	5/8"x3/8"	80	80	80	M12	27-65	36-57	43-50	2,28
ER 4 - 3/4	94071941	94071942	-	3/4"x7/16"	80	80	-	M12	27-65	37-56	-	2,46
ER 5 - 5/8	-	-	94071553	5/8"x3/8"	-	-	120	M20	-	-	56-84	5,00
ER 5 - 3/4	94071951	94071952	94071953	3/4"x7/16"	100	120	120	M20	40-80	50-90	59-80	4,61
ER 5 - 1	94072551	94072552	-	1"x17 mm	100	120	-	M20	40-80	55-84	-	5,43
ER 6 - 1	-	-	94072563	1"x17 mm	-	-	160	M20	-	-	74-108	9,50
ER 6 - 1 1/4	94073161	94073162	94073163	1"1/4x3/4"	100	140	160	M20	40-80	60-120	78-105	9,28
ER 6 - 1 1/2	94073861	94073862	94073863	1"1/2x1"	140	140	180	M20	40-120	65-97	90-111	9,33
ER 2 - 3/8	94070921MF	94070922MF	-	3/8x7/32"	55	55	-	M10	22-43	27-39	-	0,48
ER 3 - 3/8	94070931MF	94070932MF	94070933MF	3/8x7/32"	55	60	70	M10	23-43	28-39	33-48	0,73
ER 3 - 1/2	94071231MF	94071232MF	-	1/2"x5/16"	55	60	-	M10	23-44	30-37	-	0,81
ER 4 - 1/2	-	-	94071243MF	1/2"x5/16"	-	-	80	M12	-	-	41-51	2,50
ER 4 - 5/8	94071541MF	94071542MF	94071543MF	5/8"x3/8"	80	80	80	M12	27-65	36-57	43-50	2,28
ER 4 - 3/4	94071941MF	94071942MF	-	3/4"x7/16"	80	80	-	M12	27-65	37-56	-	2,46
ER 5 - 5/8	-	-	94071553MF	5/8"x3/8"	-	-	120	M20	-	-	56-84	5,00
ER 5 - 3/4	94071951MF	94071952MF	94071953MF	3/4"x7/16"	100	120	120	M20	40-80	50-90	59-80	4,61
ER 5 - 1	94072551MF	94072552MF	-	1"x17 mm	100	120	-	M20	40-80	55-84	-	5,43
ER 6 - 1	-	-	94072563MF	1"x17 mm	-	-	160	M20	-	-	74-108	9,50
ER 6 - 1 1/4	94073161MF	94073162MF	94073163MF	1"1/4x3/4"	100	140	160	M20	40-80	60-120	78-105	9,28
ER 6 - 1 1/2	94073861MF	94073862MF	94073863MF	1"1/2x1"	140	140	180	M20	40-120	65-97	90-111	9,33

FRONT SET UP

CATALOGUE UNDER REVIEW
For inquiries write at tensioner@chiaravalli.com

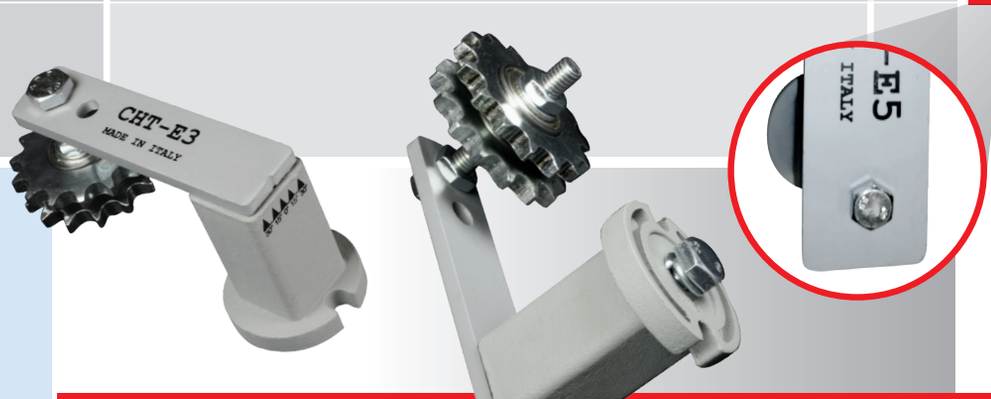

CAD drawings available on our site
www.chiaravalli.com

Quantity, availability and prices on B2B Chiaravalli

CHIARAVALLI GROUP BRAND CHT®
ROTATION BELT TENSIONER CHT - ERU

- Tensioner E with belt tensioner roller RU
- Flexible rubber items
- Supplied with set up bolts

*** ON DEMAND**
AVAILABLE WITH FRONT SET UP

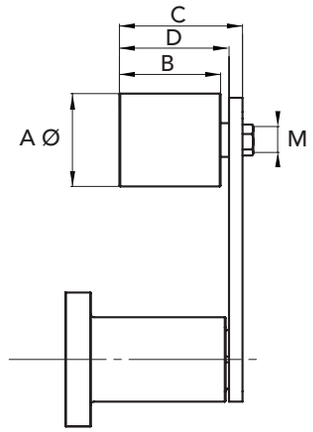

TYPE	P. NUMBER ALUMINUM	P. NUMBER STEEL	P. NUMBER POLYAMIDE	A Ø	B	C	D	M	WEIGHT Kg. ALUMINUM	WEIGHT Kg. STEEL	WEIGHT Kg. PA
ERU 1 - 3035	94073501	94073521	94073511	30	35	51	43	M8	0,27	0,33	0,25
ERU 2 - 4045	94074502	94074522	94074512	40	45	67	56	M10	0,57	0,68	0,53
ERU 2 - 5050	94075002	94075022	94075012	50	50	69	58	M12	0,64	0,95	0,58
ERU 3 - 4045	94074503	94074523	94074513	40	45	67	57	M10	0,82	0,93	0,78
ERU 3 - 5050	94075003	94075023	94075013	50	50	69	59	M12	0,89	1,20	0,83
ERU 4 - 6060	94076004	94076024	94076014	60	60	89	76	M12	2,35	2,98	2,24
ERU 5 - 8090	94078005	94078025	94078015	80	90	127	109	M20	4,90	6,50	4,40
ERU 6 - 90135	-	-	94079016	90	135	169	154	M20	-	-	7,60

FRONT SET UP

ERU 1 - 3035	94073501MF	94073521MF	94073511MF	30	35	51	43	M8	0,27	0,33	0,25
ERU 2 - 4045	94074502MF	94074522MF	94074512MF	40	45	67	56	M10	0,57	0,68	0,53
ERU 2 - 5050	94075002MF	94075022MF	94075012MF	50	50	69	58	M12	0,64	0,95	0,58
ERU 3 - 4045	94074503MF	94074523MF	94074513MF	40	45	67	57	M10	0,82	0,93	0,78
ERU 3 - 5050	94075003MF	94075023MF	94075013MF	50	50	69	59	M12	0,89	1,20	0,83
ERU 4 - 6060	94076004MF	94076024MF	94076014MF	60	60	89	76	M12	2,35	2,98	2,24
ERU 5 - 8090	94078005MF	94078025MF	94078015MF	80	90	127	109	M20	4,90	6,50	4,40
ERU 6 - 90135	-	-	94079016MF	90	135	169	154	M20	-	-	7,60

CATALOGUE UNDER REVIEW
For inquiries write at tensioner@chiaravalli.com

ROLLER MATERIAL: POLYAMIDE (PA)
ALUMINUM (AL)
GALVANIZED STEEL (GS)

CAD drawings available on our site
www.chiaravalli.com

Quantity, availability and prices on B2B Chiaravalli

- Tensioner E with sliding block chain tensioner in polyethylene UHMW high molecular mass (1.000.000) material
- Available in other colors
- Provided with bushing kit allowing the free movement of the sliding block
- Flexible rubber items
- Avaliable with sliding blocks type GA and GO. For sizes see page 32
- Supplied with set up bolts

*** ON DEMAND**
AVAILABLE WITH FRONT SET UP

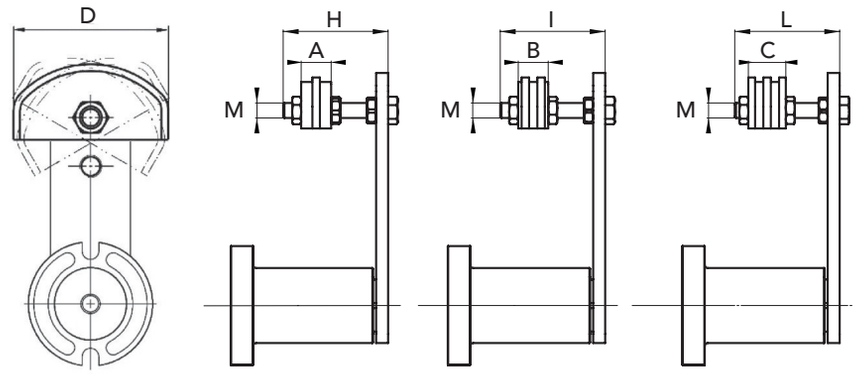

Simple **B1** Double **B2** Triple **B3**

TYPE	P. NUMBER SIMPLE	P. NUMBER DOUBLE	P. NUMBER TRIPLE	Step Chain	A	B	C	D	H	I	L	M	WEIGHT Kg.
EGE 1 - 3/8	94070901	94070902	-	3/8 X 7/32"	20	20	-	68 $^{-0}_{+2}$	45	45	-	M8	0,30
EGE 2 - 3/8	-	-	94070903	3/8 X 7/32"	-	-	25	68 $^{-0}_{+2}$	-	-	45	M10	0,50
EGE 2 - 1/2	94071201	94071202	-	1/2" X 5/16"	20	20		68 $^{-0}_{+2}$	55	55	-	M10	0,50
EGE 3 - 1/2	94071211	94071212	94071213	1/2" X 5/16"	20	20	35	68 $^{-0}_{+2}$	55	60	70	M10	0,75
EGE 3 - 5/8	94071501	94071502	-	5/8" X 3/8"	20	25	-	88 $^{-0}_{+2}$	55	70	-	M10	0,78
EGE 3 - 3/4	94071901	94071902	-	3/4" X 7/16"	20	30	-	88 $^{-0}_{+2}$	60	70	-	M10	0,80
EGE 4 - 5/8	-	-	94071503	5/8" X 3/8"	-	-	40	88 $^{-0}_{+2}$	-	-	100	M12	2,10
EGE 4 - 3/4	94071911	94071912	94071913	3/4" X 7/16"	20	30	49	88 $^{-0}_{+2}$	80	80	100	M12	2,10
EGE 4 - 1	94072501	94072502	94072503	1" X 17 mm	20	45	78	108 $^{-0}_{+2}$	80	90	100	M12	2,20
EGE 5 - 1	-	94072512	94072513	1" X 17 mm	-	45	78	108 $^{-0}_{+2}$	-	100	120	M20	4,00
EGE 5 - 1 1/4	94073101	94073102	94073103	1"1/4 x 3/4"	20	54	90	108 $^{-0}_{+2}$	100	120	130	M20	4,20
EGE 5 - 1 1/2	94073801	94073802	94073803	1"1/2 x 1"	20	71	119	108 $^{-0}_{+2}$	100	120	130	M20	4,20
EGE 1 - 3/8	94070901MF	94070902MF	-	3/8 X 7/32"	20	20	-	68 $^{-0}_{+2}$	45	45	-	M8	0,30
EGE 2 - 3/8	-	-	94070903	3/8 X 7/32"	-	-	25	68 $^{-0}_{+2}$	-	-	45	M10	0,50
EGE 2 - 1/2	94071201MF	94071202		1/2" X 5/16"	20	20		68 $^{-0}_{+2}$	55	55	-	M10	0,50
EGE 3 - 1/2	94071211MF	94071212	94071213	1/2" X 5/16"	20	20	35	68 $^{-0}_{+2}$	55	60	70	M10	0,75
EGE 3 - 5/8	94071501MF	94071502	-	5/8" X 3/8"	20	25	-	88 $^{-0}_{+2}$	55	70	-	M10	0,78
EGE 3 - 3/4	94071901MF	94071902	-	3/4" X 7/16"	20	30	-	88 $^{-0}_{+2}$	60	70	-	M10	0,80
EGE 4 - 5/8	-	-	94071503	5/8" X 3/8"	-	-	40	88 $^{-0}_{+2}$	-	-	100	M12	2,10
EGE 4 - 3/4	94071911MF	94071912	94071913	3/4" X 7/16"	20	30	49	88 $^{-0}_{+2}$	80	80	100	M12	2,10
EGE 4 - 1	94072501MF	94072502	94072503	1" X 17 mm	20	45	78	108 $^{-0}_{+2}$	80	90	100	M12	2,20
EGE 5 - 1	-	94072512	94072513	1" X 17 mm	-	45	78	108 $^{-0}_{+2}$	-	100	120	M20	4,00
EGE 5 - 1 1/4	94073101MF	94073102	94073103	1"1/4 x 3/4"	20	54	90	108 $^{-0}_{+2}$	100	120	130	M20	4,20
EGE 5 - 1 1/2	94073801MF	94073802	94073803	1"1/2 x 1"	20	71	119	108 $^{-0}_{+2}$	100	120	130	M20	4,20

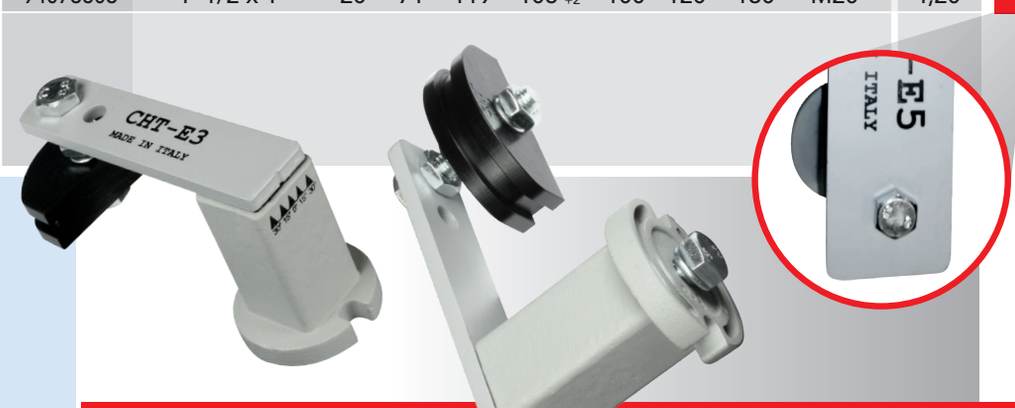

CATALOGUE UNDER REVIEW
For inquiries write at tensioner@chiaravalli.com

CAD drawings available on our site
www.chiaravalli.com

Quantity, availability and prices on B2B Chiaravalli

CHIARAVALLI GROUP BRAND CHT®
BELT TENSIONER ROLLER CHT-RU

- Belt tensioner roller complete of screws and bearings
- Made of aluminum, galvanized steel or in plastic material

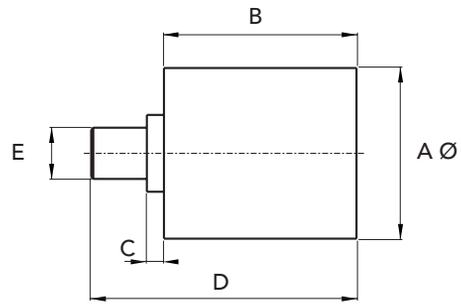

TYPE	P. NUMBER STEEL	P. NUMBER ALUMINUM	P. NUMBER POLYAMIDE	A Ø	B	C	D	E	WEIGHT Kg. STEEL	WEIGHT Kg. ALUMINUM	WEIGHT Kg. PA
RU 3035	94040235	94040035	94040135	30	35	2	51	M8	0,15	0,09	0,07
RU 4045	94040245	94040045	94040145	40	45	6	67	M10	0,33	0,22	0,18
RU 5050	94040250	94040050	94040150	50	50	2,5	70	M12	0,60	0,29	0,23
RU 6060	94040260	94040060	-	60	60	2,5	80	M12	1,08	0,45	-
RU 6060	-	-	94040160	60	60	8	85	M12	-	-	0,34
RU 8080	94040280	94040080	94040180	80	80	2,5	100	M12	2,70	1,10	0,60
RU 8090	94040290	94040090	94040190	80	90	8,5	125	M20	-	-	1,10
RU 90135	940402135	940400135	94040135	90	135	8,5	170	M20	-	-	1,70

CATALOGUE UNDER REVIEW
For inquiries write at tensioner@chiaravalli.com

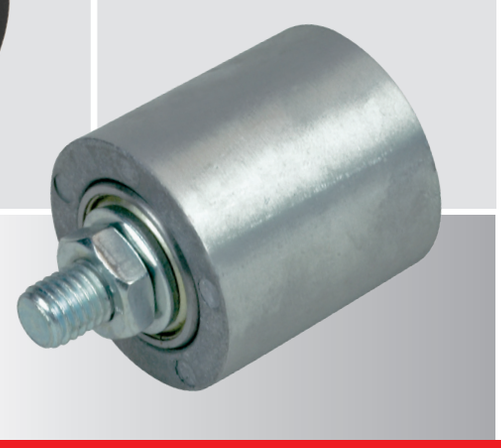

CAD drawings available on our site
www.chiaravalli.com

Quantity, availability and prices on B2B Chiaravalli

- Tensioner accessory CHT-P with free sliding block of polyethylene high molecular mass material.
  Available in other colors

Application example of sliding block CHT - P with rotating tensioner TYPE CHT - T

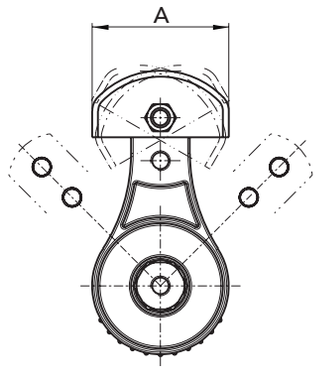

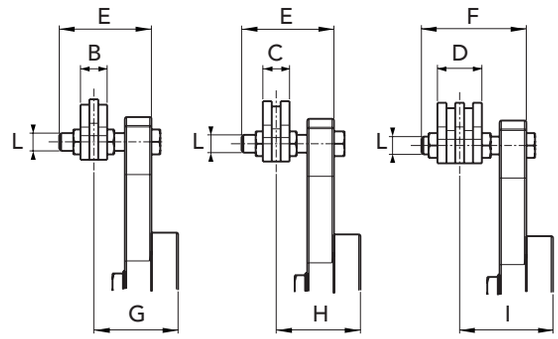

Application example with holder TYPE CHT - T

TYPE	P. NUMBER SIMPLE	P. NUMBER DOUBLE	P. NUMBER TRIPLE	Step Chain	A	B	C	D	E	F	G	H	I	L	WEIGHT Kg.
GE-P3/8"S	94050901	-	-	3/8"	68 $^{-0}_{+2}$	20	-	-	60	-	40-58	-	-	M12	0,10
GE-P1/2"S	94051201	-	-	1/2"	68 $^{-0}_{+2}$	20	-	-	60	-	40-58	-	-	M12	0,11
GE-P5/8"S	94051501	-	-	5/8"	88 $^{-0}_{+2}$	20	-	-	80	-	40-78	-	-	M12	0,17
GE-P3/4"S	94051901	-	-	3/4"	88 $^{-0}_{+2}$	20	-	-	80	-	46-81	-	-	M12	0,19
GE-P1"S	94052501	-	-	1"	108 $^{-0}_{+2}$	20	-	-	100	-	46-100	-	-	M12	0,28
GE-P3/8"D	-	94050902	-	3/8"	68 $^{-0}_{+2}$	-	20	-	60	-	-	40-58	-	M12	0,11
GE-P1/2"D	-	94051202	-	1/2"	68 $^{-0}_{+2}$	-	20	-	60	-	-	40-58	-	M12	0,11
GE-P5/8"D	-	94051502	-	5/8"	88 $^{-0}_{+2}$	-	25	-	80	-	-	43-75	-	M12	0,17
GE-P3/4"D	-	94051902	-	3/4"	88 $^{-0}_{+2}$	-	30	-	80	-	-	51-76	-	M12	0,21
GE-P1"D	-	94052502	-	1"	108 $^{-0}_{+2}$	-	45	-	100	-	-	59-88	-	M12	0,32
GE-P3/8"T	-	-	94050903	3/8"	68 $^{-0}_{+2}$	-	-	25	-	80	-	-	43-75	M12	0,15
GE-P1/2"T	-	-	94051203	1/2"	68 $^{-0}_{+2}$	-	-	35	-	80	-	-	48-70	M12	0,18
GE-P5/8"T	-	-	94051503	5/8"	88 $^{-0}_{+2}$	-	-	40	-	80	-	-	50-68	M12	0,26
GE-P3/4"T	-	-	94051903	3/4"	88 $^{-0}_{+2}$	-	-	49	-	100	-	-	61-86	M12	0,35
GE-P1"T	-	-	94052003	1"	108 $^{-0}_{+2}$	-	-	78	-	130	-	-	64-84	M12	0,45

CATALOGUE UNDER REVIEW
For inquiries write at tensioner@chiaravalli.com

CAD drawings available on our site
www.chiaravalli.com

Quantity, availability and prices on B2B Chiaravalli

CHIARAVALLI GROUP BRAND CHT®
TENSIONER SLIDING BLOCK TYPE CHT - GA CHT - GE CHT - GO

- Chain tensioner sliding block of polyethylene UHMW high molecular mass (1.000.000) material
- Complete with a bushing kit, allow any free movement only for type GE
- Available on request in other colors

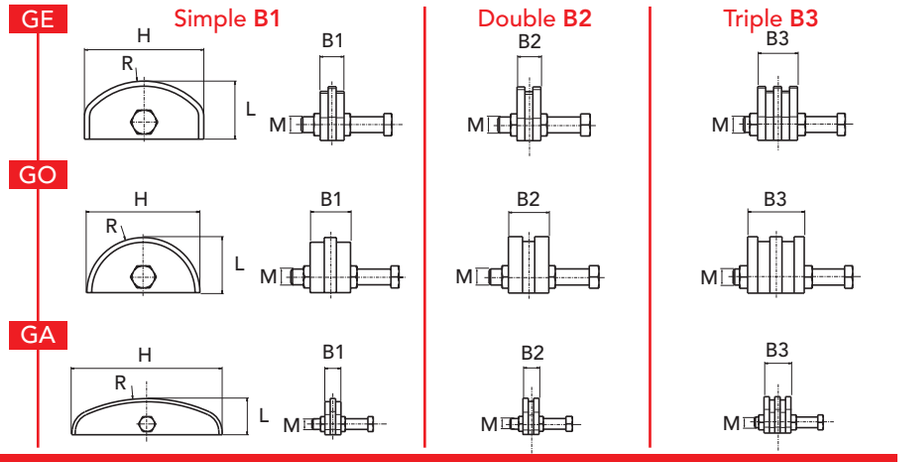

	TYPE	P. NUMBER SIMPLE	P. NUMBER DOUBLE	P. NUMBER TRIPLE	Step Chain	B1	B2	B3	L	M	H	R	WEIGHT Kg.
GE	GE - 3/8"	94090901	94090902	-	3/8 x 7/32"	20	20	-	34	M8	68 -0 +2	42	0,10
	GE - 3/8"	-	-	94090903	3/8 x 7/32"	-	-	25	34	M10	68 -0 +2	42	0,10
	GE - 1/2"	94091201	94091202	94091203	1/2" x 5/16"	20	20	35	34	M10	68 -0 +2	42	0,11
	GE - 5/8"	94091501	94091502	-	5/8" x 3/8"	20	25	-	44	M10	88 -0 +2	54	0,17
	GE - 5/8"	-	-	94091503	5/8" x 3/8"	-	-	40	44	M12	88 -0 +2	54	0,17
	GE - 3/4"	94093401	94093402	-	3/4" x 7/16"	20	30	-	44	M10	88 -0 +2	54	0,19
	GE - 3/4"	94091901	94091902	94091903	3/4" x 7/16"	20	30	49	44	M12	88 -0 +2	54	0,19
	GE - 1"	94092501	94092502	94092503	1" x 17 mm	25	45	78	54	M12	108 -0 +2	66	0,28
	GE - 1"	-	94092602	94092603	1" x 17 mm	-	45	78	54	M20	108 -0 +2	66	0,28
	GE - 1"1/4	94093101	94093102	94093103	1"1/4 x 3/4"	25	54	90	54	M20	108 -0 +2	66	0,28
	GE - 1"1/2	94093801	94093802	94093803*	1"1/2 x 1"	25	71	119	54	M20	108 -0 +2	66	0,28
GO	GO - 3/8"	94110901	94110902	94110903	3/8 x 7/32"	20	20	25	34	M8	70	35	0,10
	GO - 1/2"	94111201	94111202	94111203	1/2" x 5/16"	20	20	35	34	M10	70	35	0,11
	GO - 5/8"	94111501	94111502	94111503	5/8" x 3/8"	20	25	40	44	M10	90	45	0,17
	GO - 3/4"	94111901	94111902	94111903	3/4" x 7/16"	20	30	49	44	M12	90	45	0,19
	GO - 1"	94112501	94112502	94112503	1" xs 17 mm	25	45	78	54	M12	110	55	0,28
	GO - 1"1/4	94113101	94113102	94113103	1"1/4 x 3/4"	25	54	90	54	M20	110	55	0,28
	GO - 1"1/2	94113801	94113802	94113803*	1"1/2 x 1"	25	71	119	54	M20	110	55	0,28
GA	GA - 3/8"	94080901	94080902	94080903	3/8 x 7/32"	20	20	25	39	M8	140	120	0,16
	GA - 1/2"	94081201	94081202	94081203	1/2" x 5/16"	20	20	35	39	M10	140	120	0,16
	GA - 5/8"	94081501	94081502	94081503	5/8" x 3/8"	20	25	40	39	M10	140	140	0,23
	GA - 3/4"	94081901	94081902	94081903	3/4" x 7/16"	20	30	49	39	M12	140	140	0,23
	GA - 1"	94082501	94082502	94082503	1" x 17 mm	25	45	78	39	M12	140	160	0,30

CATALOGUE UNDER REVIEW
For inquiries write at tensioner@chiaravalli.com

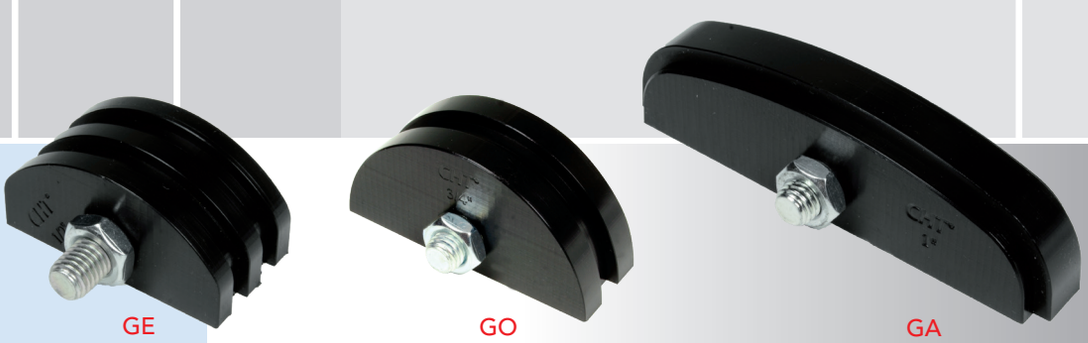

CAD drawings available on our site
www.chiaravalli.com

Quantity, availability and prices on B2B Chiaravalli

- Chain tensioner sliding block of polyethylene UHMW high molecular mass (1.000.000) material
- Available on request in other colors

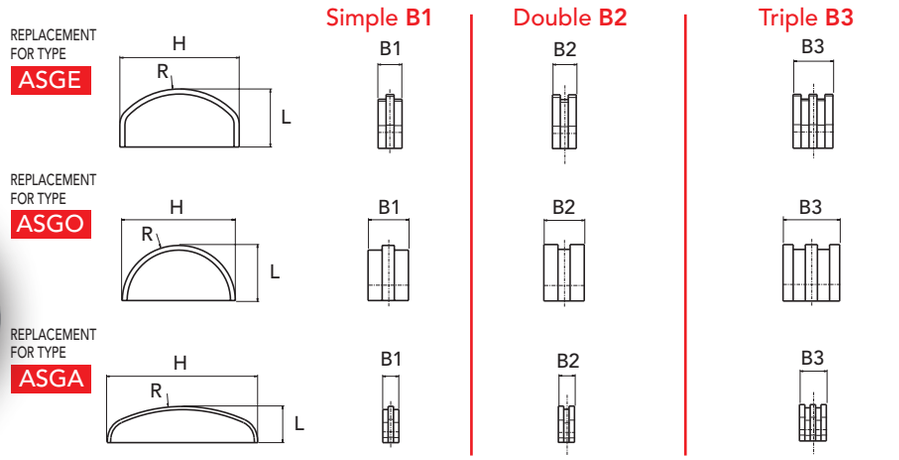

REPLACEMENT FOR TYPE	P. NUMBER SIMPLE	P. NUMBER DOUBLE	P. NUMBER TRIPLE	Step Chain	B1	B2	B3	L	H	R	WEIGHT Kg.
ASGE - 3/8"	94ASGE138SR	94ASGE138DR	-	3/8 x 7/32"	20	20	-	34	68 -0 +2	42	0,10
ASGE - 3/8"	-	-	94ASGE138TR	3/8 x 7/32"	-	-	25	34	68 -0 +2	42	0,10
ASGE - 1/2"	94ASGE112SR	94ASGE112DR	94ASGE112TR	1/2" x 5/16"	20	20	35	34	68 -0 +2	42	0,11
ASGE - 5/8"	94ASGE158SR	94ASGE158DR	-	5/8" x 3/8"	20	25	-	44	88 -0 +2	54	0,17
ASGE - 5/8"	-	-	94ASGE158TR	5/8" x 3/8"	-	-	40	44	88 -0 +2	54	0,17
ASGE - 5/8"	94ASGE258SR	94ASGE258DR	94ASGE258TR	5/8" x 3/8"	-	-	40	44	88 -0 +2	54	0,17
ASGE - 3/4"	94ASGE234SR	94ASGE234DR	94ASGE234TR	3/4" x 7/16"	20	30	49	44	88 -0 +2	54	0,19
ASGE - 1"	94ASGE21SR	94ASGE21DR	-	1" x 17 mm	25	45	78	54	108 -0 +2	66	0,28
ASGE - 1"	94ASGE31SR	94ASGE31DR	94ASGE31TR	1" x 17 mm	-	45	78	54	108 -0 +2	66	0,28
ASGE - 1"1/4	94ASGE3114SR	94ASGE3114DR	94ASGE3114TR	1"1/4 x 3/4"	25	54	90	54	108 -0 +2	66	0,28
ASGE - 1"1/2	94ASGE3112SR	94ASGE3112DR	94ASGE3112TR	1"1/2 x 1"	25	71	119	54	108 -0 +2	66	0,28
ASGE - 1"3/4	94ASGE3134SR	-	-	1"3/4 x 1"1/4	25	-	-	54	108 -0 +2	66	0,28
ASGE - 2"	94ASGE32SR	-	-	2" x 1"1/4	30	-	-	54	108 -0 +2	66	0,28
ASGO - 3/8"	94ASGO138SR	94ASGO138DR	94ASGO138TR	3/8 x 7/32"	20	20	25	34	70	35	0,10
ASGO - 1/2"	94ASGO112SR	94ASGO112DR	94ASGO112TR	1/2" x 5/16"	20	20	35	34	70	35	0,11
ASGO - 5/8"	94ASGO158SR	94ASGO158DR	94ASGO158TR	5/8" x 3/8"	20	25	40	44	90	45	0,17
ASGO - 5/8"	94ASGO258SR	94ASGO258DR	94ASGO258TR	5/8" x 3/8"	20	25	40	44	90	45	0,17
ASGO - 3/4"	94ASGO234SR	94ASGO234DR	94ASGO234TR	3/4" x 7/16"	20	30	49	44	90	45	0,19
ASGO - 1"	94ASGO21SR	94ASGO21DR	-	1" x 17 mm	25	45	78	54	110	55	0,28
ASGO - 1"	94ASGO31SR	94ASGO31DR	94ASGO31TR	1" x 17 mm	25	45	78	54	110	55	0,28
ASGO - 1"1/4	94ASGO3114SR	94ASGO3114DR	94ASGO3114TR	1"1/4 x 3/4"	25	54	90	54	110	55	0,28
ASGO - 1"1/2	94ASGO3112SR	94ASGO3112DR	94ASGO3112TR	1"1/2 x 1"	25	71	119	54	110	55	0,28
ASGO - 1"3/4	94ASGO3134SR	-	-	1"3/4 x 1"1/4	20	-	-	44	90	45	0,19
ASGO - 2"	94ASGO32SR	-	-	2" x 1"1/4	30	-	-	15	88	54	0,19
ASGA - 3/8"	94ASGA138SR	94ASGA138DR	94ASGA138TR	3/8 x 7/32"	20	20	25	39	140	120	0,16
ASGA - 1/2"	94ASGA112SR	94ASGA112DR	94ASGA112TR	1/2" x 5/16"	20	20	35	39	140	120	0,16
ASGA - 5/8"	94ASGA158SR	94ASGA158DR	94ASGA158TR	5/8" x 3/8"	20	25	40	39	140	140	0,23
ASGA - 5/8"	94ASGA258SR	94ASGA258DR	94ASGA258TR	5/8" x 3/8"	20	25	40	39	140	140	0,23
ASGA - 3/4"	94ASGA234SR	94ASGA234DR	94ASGA234TR	3/4" x 7/16"	20	30	49	39	140	140	0,23
ASGA - 1"	94ASGA31SR	94ASGA31DR	94ASGA31TR	1" x 17 mm	25	45	78	39	140	160	0,30
ASGA - 1"1/4	94ASGA3114SR	94ASGA3114DR	94ASGA3114TR	1"1/4 x 3/4"	25	54	90	17,5	108	66	0,28
ASGA - 1"1/2	94ASGA3112SR	94ASGA3112DR	94ASGA3112TR	1"1/2 x 1"	25	71	119	17,5	108	66	0,28
ASGA - 2"	94ASGA32SR	-	-	2" x 1"1/4	30	-	-	44	90	45	0,19

ASGE ASGO ASGA

CAD drawings available on our site
www.chiaravalli.com

Quantity, availability and prices on B2B Chiaravalli

CATALOGUE UNDER REVIEW
For inquiries write at tensioner@chiaravalli.com

CHIARAVALLI GROUP BRAND CHT®
CHAIN TENSIONER SPROCKETS CHT - R

- Zinc-coated chain tensioner sprockets complete with self-lubricating ball-bearings 2Z and accessories for the assembling on tensioners CHT-L, CHT-T, CHT-AS and CHT-E.

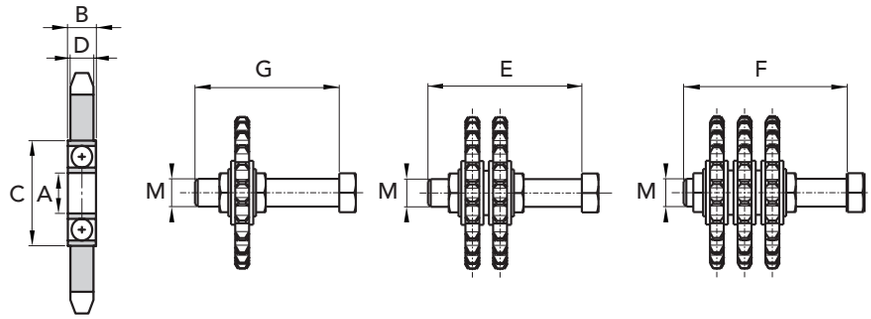

TYPE	P. NUMBER SIMPLE	P. NUMBER DOUBLE	P. NUMBER TRIPLE	Step Chain	Z Teeth	A	B	C	D h14	M	G	E	F
R	94060911	94060912	-	3/8″	15	10	8	26	5,3	M10	55	55	-
R	94060901	94060902	94060903	3/8″	15	12	8	28	5,3	M12	60	60	80
R	94061201	94061202	94061203	1/2″	15	12	10	32	7,2	M12	60	60	80
R	94061211	94061212	-	1/2″	15	10	9	30	7,2	M10	55	60	-
R	94061501	94061502	94061503	5/8″	15	12	10	32	9,1	M12	80	80	80
R	-	-	94061523	5/8″	15	20	12	42	9,1	M20	-	-	120
R	94061901	94061902	94061903	3/4″	15	12	12	37	11,1	M12	80	80	100
R	94061921	94061922	94061923	3/4″	15	20	14	47	11,1	M20	100	120	120
R	94062501	94062502	-	1″	12	12	12	37	16,2	M12	100	100	-
R	94062521	94062522	94062523	1″	12	20	15	47	16,2	M20	100	120	160
R	94063121	94063122	94063123	1″1/4	13	20	15	52	18,5	M20	100	140	160
R	94063821	94063822	94063823	1″1/2	11	20	15	52	24,1	M20	140	140	180

TYPE	P. NUMBER SIMPLE	WEIGHT Kg. SIMPLE	P. NUMBER DOUBLE	WEIGHT Kg. DOUBLE	P. NUMBER TRIPLE	WEIGHT Kg. TRIPLE
R	94060911	0,15	94060912	0,23	-	-
R	94060901	0,13	94060902	0,21	94060903	0,26
R	94061201	0,18	94061202	0,35	94061203	0,50
R	94061211	0,20	94061212	0,37	-	-
R	94061501	0,35	94061502	0,60	94061503	0,95
R	-	-	-	-	94061523	1,30
R	94061901	0,55	94061902	1,00	94061903	1,40
R	94061921	0,85	94061922	1,35	94061923	1,60
R	94062501	0,90	94062502	1,70	-	2,50
R	94062521	1,00	94062522	1,90	94062523	2,70
R	94063121	2,00	94063122	3,60	94063123	5,20
R	94063821	2,35	94063822	4,00	94063823	5,80

CATALOGUE UNDER REVIEW
For inquiries write at tensioner@chiaravalli.com

CAD drawings available on our site
www.chiaravalli.com

Quantity, availability and prices on B2B Chiaravalli

CHAIN TENSIONER SPROCKETS CHT - TN

With NATIONAL BEARINGS

Our chain tensioner are complete of bearings, ready to be assembled in particular tension positions.
The accurate machining and the particular assembly optained by a ball bearing with a double protection screen, allow an application with greater load and more wear resistance.
The central bearing with "widen" ring, allows an easy assembly on special machines of all kinds of machinery.

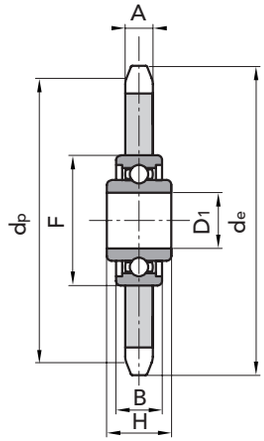

Z	STEP	d_e	d_p	P. NUMBER	A	D1	F	B	H	kg.
23	8 x 3	62,15	58,75	30008023	2,8	16 $^{+0,26}_{+0,13}$	40	12	18,3	0,13
21	3/8" x 7/32"	68,00	63,90	30009021	5,3	16 $^{+0,26}_{+0,13}$	40	12	18,3	0,15
22	3/8" x 7/32"	71,00	66,93	30009022	5,3	16 $^{+0,26}_{+0,13}$	40	12	18,3	0,16
18	1/2" x 1/8"	78,90	73,14	30010018	3,0	16 $^{+0,26}_{+0,13}$	40	12	18,3	0,18
15	1/2" x 3/16"	66,80	61,09	30011015	4,5	16 $^{+0,26}_{+0,13}$	40	12	18,3	0,16
16	1/2" x 3/16"	70,90	65,10	30011016	4,5	16 $^{+0,26}_{+0,13}$	40	12	18,3	0,17
18	1/2" x 3/16"	78,90	73,13	30011018	4,5	16 $^{+0,26}_{+0,13}$	40	12	18,3	0,20
14	1/2" x 5/16"	61,80	57,07	30012014	7,2	16 $^{+0,26}_{+0,13}$	40	12	18,3	0,13
16	1/2" x 5/16"	69,50	65,10	30012016	7,2	16 $^{+0,26}_{+0,13}$	40	12	18,3	0,17
18	1/2" x 5/16"	77,80	73,14	30012018	7,2	16 $^{+0,26}_{+0,13}$	40	12	18,3	0,22
14	5/8" x 3/8"	78,00	71,34	30015014	9,1	16 $^{+0,26}_{+0,13}$	40	12	18,3	0,23
15	5/8" x 3/8"	83,00	76,36	30015015	9,1	16 $^{+0,26}_{+0,13}$	40	12	18,3	0,27
17	5/8" x 3/8"	93,00	86,39	30015017	9,1	16 $^{+0,26}_{+0,13}$	40	12	18,3	0,36
13	3/4" x 7/16"	87,50	79,59	30019013	11,1	16 $^{+0,26}_{+0,13}$	40	12	18,3	0,34
15	3/4" x 7/16"	99,80	91,63	30019015	11,1	16 $^{+0,26}_{+0,13}$	40	12	18,3	0,47
12	1" x 17.02	109,00	98,14	30025012	16,2	20 $^{+0}_{+0,1}$	47	14	17,7	0,72
13	1"1/4 x 3/4"	147,80	132,65	30031013	18,5	25 $^{+0}_{+0,1}$	52	15	21,0	1,64

CATALOGUE UNDER REVIEW
For inquiries write at tensioner@chiaravalli.com

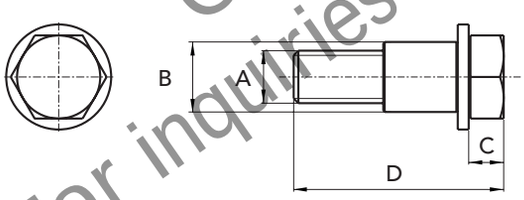

ASSEMBLY KIT FOR OUR CHAIN TENSIONER SPROCKET CHT-TN MUST **BE ORDERED SEPARATELY**

	P. NUMBER	A	B	C	D	Kg.
KIT TN 16	KTN16	M12	16	8	48	0,06
KIT TN 20	KTN20	M12	20	8	53	0,07
KIT TN 25	KTN25	M16	25	10	50	0,10

The securing kit Series TN provides an easy assembly of the chain tensioner TN with our automatic tensioners Series T, AS, L.

The kit is composed of hexagonal head screw, washer and bushing.

CAD drawings available on our site
www.chiaravalli.com

Quantity, availability and prices on B2B Chiaravalli

INOX

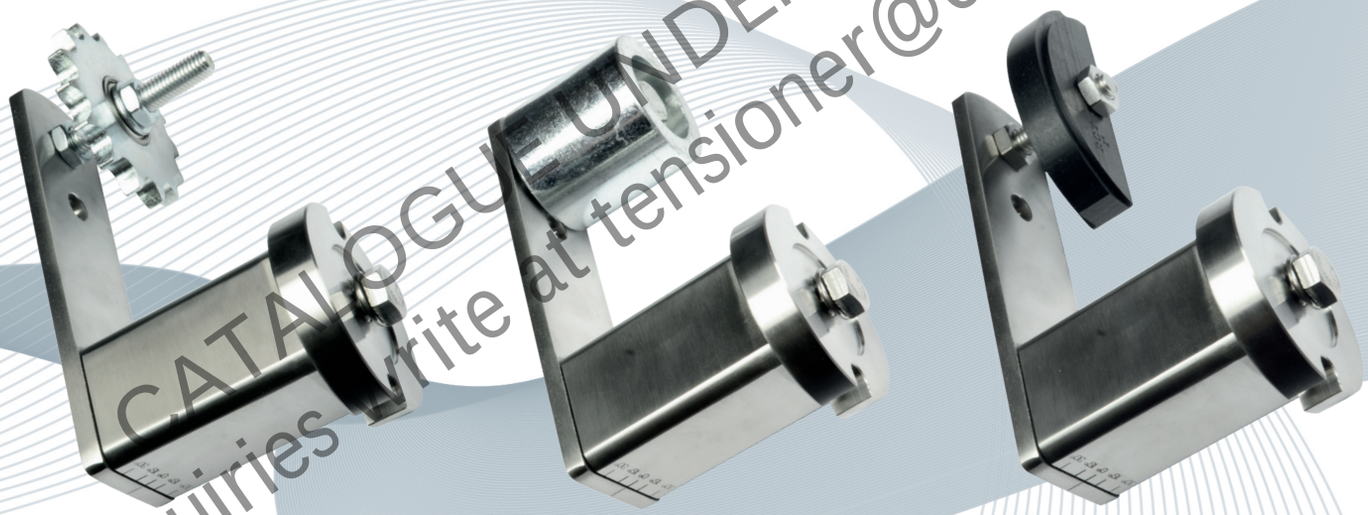

CATALOGUE UNDER REVIEW
For inquiries write at tensioner@chiaravalli.com

TYPE E INOX

1) Loosen the fixing screw "A" slightly with the first spanner.
2) Rotate the tensioner "B" in the desired direction with a second spanner, placed on basic body square
3) Tighten the screw "A".

NOTE
In case of irregular surfaces or heavy applications, it is advisable to use two securing screws, to avoid the tensioner rotation.

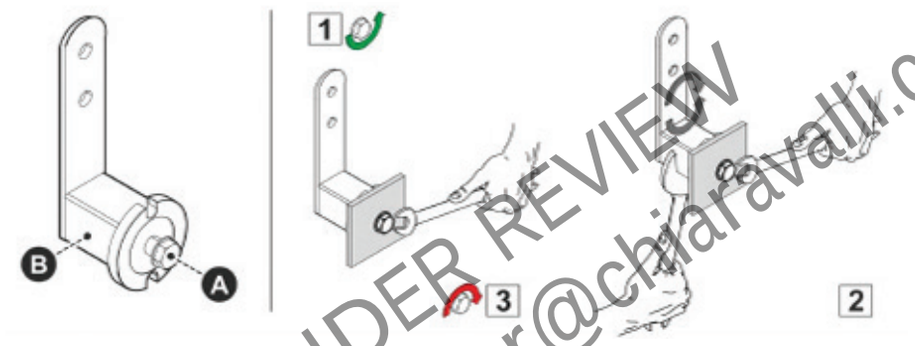

CATALOGUE UNDER REVIEW
For inquiries write at tensioner@chiaravalli.com

STANDARD VERSION **INOX**

ON DEMAND
AVAILABLE WITH FRONT SET UP

CHIARAVALLI GROUP BRAND CHT®
ROTATING TENSIONER CHT - E

- Stainless steel AISI 304 Tensioner E with two holes for fixing accessories
- Flexible rubber items
- Supplied with set up bolts made of stainless steel AISI 304

*** ON DEMAND AVAILABLE WITH FRONT SET UP**

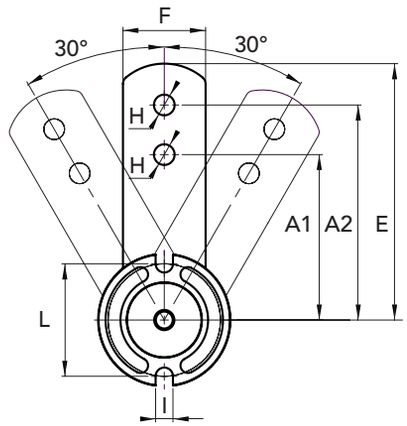

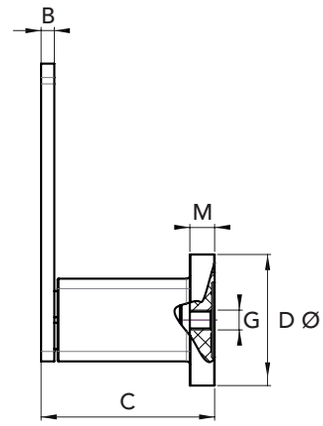

TYPE	P. NUMBER	Newton A2	Newton A1	A1	A2	B	C	D Ø	E	F	G	H	I	L	M	WEIGHT Kg.
E 1	94070001SS	0 - 90	0 - 110	60	80	5	50	35	90	20	M6	8,5	7	31	6	0,18
E 2	94070002SS	0 - 130	0 - 160	80	100	5	63	45	112,5	30	M8	10,5	9	41	8	0,35
E 3	94070003SS	0 - 330	0 - 410	80	100	6	77	59	115	35	M10	10,5	9	48	10	0,60
E 4	94070004SS	0 - 800	0 - 1000	100	130	8	107	79	155	50	M12	12,5	11	63	15	1,90
E 5	94070005SS	0 - 1500	0 - 1850	140	175	10	139	98	205	60	M16	20,5	13	84	15	3,80
E 6	94070006SS	0 - 2500	0 - 3100	180	225	12	199	118	260	70	M20	20,5	13	100	18	6,50
E 7	94070007SS	0 - 3800	0 - 4800	200	250	20	210	128	290	80	M24	20,5	17	107	20	9,00
E 1	94070001MFSS	0 - 90	0 - 110	60	80	5	50	35	90	20	M6	8,5	7	31	6	0,18
E 2	94070002MFSS	0 - 130	0 - 160	80	100	5	63	45	112,5	30	M8	10,5	9	41	8	0,35
E 3	94070003MFSS	0 - 330	0 - 410	80	100	6	77	59	115	35	M10	10,5	9	48	10	0,60
E 4	94070004MFSS	0 - 800	0 - 1000	100	130	8	107	79	155	50	M12	12,5	11	63	15	1,90
E 5	94070005MFSS	0 - 1500	0 - 1850	140	175	10	139	98	205	60	M16	20,5	13	84	15	3,80
E 6	94070006MFSS	0 - 2500	0 - 3100	180	225	12	199	118	260	70	M20	20,5	13	100	18	6,50
E 7	94070007MFSS	0 - 3800	0 - 4800	200	250	20	210	128	290	80	M24	20,5	17	107	20	9,00

FRONT SET UP

CATALOGUE UNDER REVIEW
For inquiries write at tensioner@chiaravalli.com

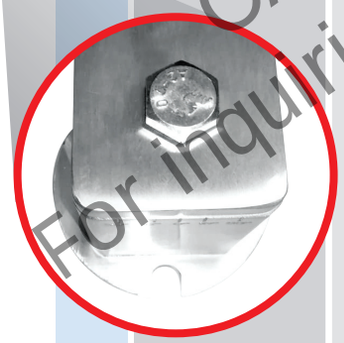

ON DEMAND AVAILABLE IN STAINLESS STEEL AISI 316

CAD drawings available on our site
www.chiaravalli.com

Quantity, availability and prices on B2B Chiaravalli

- Stainless steel AISI 304 Tensioner E with chain tensioner sprocket (simple, double, triple) also made of stainless steel AISI 304
- Flexible rubber items
- Supplied with set up bolts made of stainless steel AISI 304

*** ON DEMAND AVAILABLE WITH FRONT SET UP**

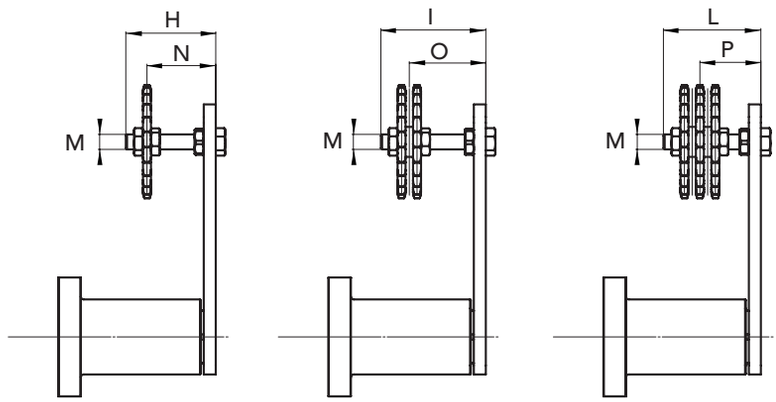

Simple **B1** Double **B2** Triple **B3**

TYPE	P. NUMBER SIMPLE	P. NUMBER DOUBLE	P. NUMBER TRIPLE	Step Chain	H	I	L	M	N	O	P	WEIGHT Kg.
ER 2 - 3/8	94070921SS	94070922SS	-	3/8x7/32"	55	55	-	M10	22-43	27-39	-	0,48
ER 3 - 3/8	94070931SS	94070932SS	94070933SS	3/8x7/32"	55	60	70	M10	23-43	28-39	33-48	0,73
ER 3 - 1/2	94071231SS	94071232SS	-	1/2"x5/16"	55	60	-	M10	23-44	30-37	-	0,81
ER 4 - 1/2	-	-	94071243SS	1/2"x5/16"	-	-	80	M12	-	-	41-51	2,50
ER 4 - 5/8	94071541SS	94071542SS	94071543SS	5/8"x3/8"	80	80	80	M12	27-65	36-57	43-50	2,28
ER 4 - 3/4	94071941SS	94071942SS	-	3/4"x7/16"	80	80	-	M12	27-65	37-56	-	2,46
ER 5 - 5/8	-	-	94071553SS	5/8"x3/8"	-	-	120	M20	-	-	56-84	5,00
ER 5 - 3/4	94071951SS	94071952SS	94071953SS	3/4"x7/16"	100	120	120	M20	40-80	50-90	59-80	4,61
ER 5 - 1	94072551SS	94072552SS	-	1"x17 mm	100	120	-	M20	40-80	55-84	-	5,43
ER 6 - 1	-	-	94072563SS	1"x17 mm	-	-	160	M20	-	-	74-108	9,50
ER 6 - 1 1/4	94073161SS	94073162SS	94073163SS	1"1/4x3/4"	100	140	160	M20	40-80	60-120	78-105	9,28
ER 6 - 1 1/2	94073861SS	94073862SS	94073863SS	1"1/2x1"	140	140	180	M20	40-120	65-97	90-111	9,33
ER 2 - 3/8	94070921MFSS	94070922MFSS	-	3/8x7/32"	55	55	-	M10	22-43	27-39	-	0,48
ER 3 - 3/8	94070931MFSS	94070932MFSS	94070933MFSS	3/8x7/32"	55	60	70	M10	23-43	28-39	33-48	0,73
ER 3 - 1/2	94071231MFSS	94071232MFSS	-	1/2"x5/16"	55	60	-	M10	23-44	30-37	-	0,81
ER 4 - 1/2	-	-	94071243MFSS	1/2"x5/16"	-	-	80	M12	-	-	41-51	2,50
ER 4 - 5/8	94071541MFSS	94071542MFSS	94071543MFSS	5/8"x3/8"	80	80	80	M12	27-65	36-57	43-50	2,28
ER 4 - 3/4	94071941MFSS	94071942MFSS	-	3/4"x7/16"	80	80	-	M12	27-65	37-56	-	2,46
ER 5 - 5/8	-	-	94071553MFSS	5/8"x3/8"	-	-	120	M20	-	-	56-84	5,00
ER 5 - 3/4	94071951MFSS	94071952MFSS	94071953MFSS	3/4"x7/16"	100	120	120	M20	40-80	50-90	59-80	4,61
ER 5 - 1	94072551MFSS	94072552MFSS	-	1"x17 mm	100	120	-	M20	40-80	55-84	-	5,43
ER 6 - 1	-	-	94072563MFSS	1"x17 mm	-	-	160	M20	-	-	74-108	9,50
ER 6 - 1 1/4	94073161MFSS	94073162MFSS	94073163MFSS	1"1/4x3/4"	100	140	160	M20	40-80	60-120	78-105	9,28
ER 6 - 1 1/2	94073861MFSS	94073862MFSS	94073863MFSS	1"1/2x1"	140	140	180	M20	40-120	65-97	90-111	9,33

CATALOGUE UNDER REVIEW
For inquiries write at tensioner@chiaravalli.com

ON DEMAND AVAILABLE IN STAINLESS STEEL AISI 316

CAD drawings available on our site
www.chiaravalli.com

Quantity, availability and prices on B2B Chiaravalli

CHIARAVALLI GROUP BRAND **CHT®**
ROTATING TENSIONER **CHT - ERU**

- Stainless steel AISI 304 Tensioner E with stailness steel AISI 304 belt tensioner roller RU
- Flexible rubber items
- Supplied with set up bolts made of stainless steel AISI 304

*** ON DEMAND AVAILABLE WITH FRONT SET UP**

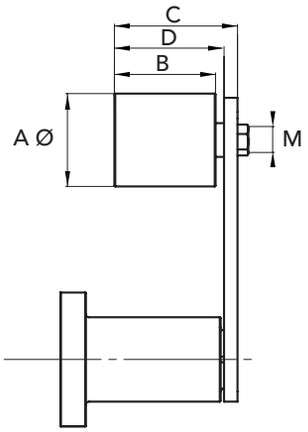

TYPE	P. NUMBER STAINLESS	P. NUMBER POLYAMIDE	A Ø	B	C	D	M	WEIGHT Kg. STEEL	WEIGHT Kg. PA
ERU 1 - 3035	94073521SS	94073511SS	30	35	51	43	M8	0,33	0,25
ERU 2 - 4045	94074522SS	94074512SS	40	45	67	56	M10	0,68	0,53
ERU 2 - 5050	94075022SS	94075012SS	50	50	69	58	M12	0,95	0,58
ERU 3 - 4045	94074523SS	94074513SS	40	45	67	57	M10	0,93	0,78
ERU 3 - 5050	94075023SS	94075013SS	50	50	69	59	M12	1,20	0,83
ERU 4 - 6060	94076024SS	94076014SS	60	60	89	76	M12	2,98	2,24
ERU 5 - 8090	94078025SS	94078015SS	80	90	127	109	M20	6,50	4,40
ERU 6 - 90135	-	94079016SS	90	135	169	154	M20	-	7,60
ERU 1 - 3035	94073521MFSS	94073511MFSS	30	35	51	43	M8	0,33	0,25
ERU 2 - 4045	94074522MFSS	94074512MFSS	40	45	67	56	M10	0,68	0,53
ERU 2 - 5050	94075022MFSS	94075012MFSS	50	50	69	58	M12	0,95	0,58
ERU 3 - 4045	94074523MFSS	94074513MFSS	40	45	67	57	M10	0,93	0,78
ERU 3 - 5050	94075023MFSS	94075013MFSS	50	50	69	59	M12	1,20	0,83
ERU 4 - 6060	94076024MFSS	94076014MFSS	60	60	89	76	M12	2,98	2,24
ERU 5 - 8090	94078025MFSS	94078015MFSS	80	90	127	109	M20	6,50	4,40
ERU 6 - 90135	-	94079016MFSS	90	135	169	154	M20	-	7,60

FRONT SET UP

CATALOGUE UNDER REVIEW
For inquiries write at tensioner@chiaravalli.com

ROLLER MATERIAL: POLYAMIDE (PA)
STAINLESS STEEL AISI 304 (AC)

ON DEMAND AVAILABLE IN STAINLESS STEEL AISI 316

CAD drawings available on our site
www.chiaravalli.com

Quantity, availability and prices on B2B Chiaravalli

- Stainless steel AISI 304 Tensioner E with sliding block chain tensioner in polyethylene UHMW high molecular mass (1.000.000) material
- Available in other colors
- Provided with bushing kit allowing the free movement of the sliding block
- Flexible rubber items
- Avaliable with sliding blocks type GA and GO. For sizes see page 32
- Supplied with set up bolts made of stainless steel AISI 304

*** ON DEMAND**
AVAILABLE WITH FRONT SET UP

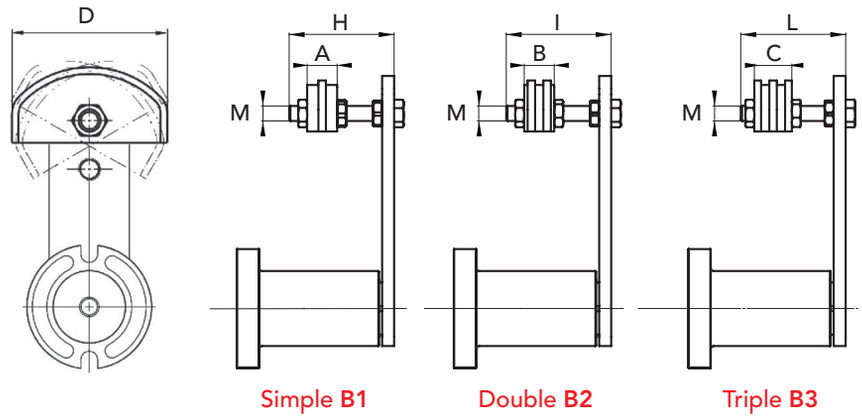

ROTATING TENSIONER **CHT - EGE**

TYPE	P. NUMBER SIMPLE	P. NUMBER DOUBLE	P. NUMBER TRIPLE	Step Chain	A	B	C	D	H	I	L	M	WEIGHT Kg.
EGE 1 - 3/8	94070901SS	94070902SS	-	3/8 X 7/32"	20	20	-	68 $^{-0}_{+2}$	45	45	-	M8	0,30
EGE 2 - 3/8	-	-	94070903SS	3/8 X 7/32"	-	-	25	68 $^{-0}_{+2}$	-	-	45	M10	0,50
EGE 2 - 1/2	94071201SS	94071202SS	-	1/2" X 5/16"	20	20		68 $^{-0}_{+2}$	55	55	-	M10	0,50
EGE 3 - 1/2	94071211SS	94071212SS	94071213SS	1/2" X 5/16"	20	20	35	68 $^{-0}_{+2}$	55	60	70	M10	0,75
EGE 3 - 5/8	94071501SS	94071502SS	-	5/8" X 3/8"	20	25	-	88 $^{-0}_{+2}$	55	70	-	M10	0,78
EGE 3 - 3/4	94071901SS	94071902SS	-	3/4" X 7/16"	20	30	-	88 $^{-0}_{+2}$	60	70	-	M10	0,80
EGE 4 - 5/8	-	-	94071503SS	5/8" X 3/8"	-	-	40	88 $^{-0}_{+2}$	-	-	100	M12	2,10
EGE 4 - 3/4	94071911SS	94071912SS	94071913SS	3/4" X 7/16"	20	30	49	88 $^{-0}_{+2}$	80	80	100	M12	2,10
EGE 4 - 1	94072501SS	94072502SS	94072503SS	1" X 17 mm	20	45	78	108 $^{-0}_{+2}$	80	90	100	M12	2,20
EGE 5 - 1	-	94072512SS	94072513SS	1" X 17 mm	-	45	78	108 $^{-0}_{+2}$	-	100	120	M20	4,00
EGE 5 - 1 1/4	94073101SS	94073102SS	94073103SS	1"1/4 x 3/4"	20	54	90	108 $^{-0}_{+2}$	100	120	130	M20	4,20
EGE 5 - 1 1/2	94073801SS	94073802SS	94073803SS	1"1/2 x 1"	20	71	119	108 $^{-0}_{+2}$	100	120	130	M20	4,20
EGE 1 - 3/8	94070901MFSS	94070902MFSS	-	3/8 X 7/32"	20	20	-	68 $^{-0}_{+2}$	45	45	-	M8	0,30
EGE 2 - 3/8	-	-	94070903MFSS	3/8 X 7/32"	-	-	25	68 $^{-0}_{+2}$	-	-	45	M10	0,50
EGE 2 - 1/2	94071201MFSS	94071202MFSS	-	1/2" X 5/16"	20	20		68 $^{-0}_{+2}$	55	55	-	M10	0,50
EGE 3 - 1/2	94071211MFSS	94071212MFSS	94071213MFSS	1/2" X 5/16"	20	20	35	68 $^{-0}_{+2}$	55	60	70	M10	0,75
EGE 3 - 5/8	94071501MFSS	94071502MFSS	-	5/8" X 3/8"	20	25	-	88 $^{-0}_{+2}$	55	70	-	M10	0,78
EGE 3 - 3/4	94071901MFSS	94071902MFSS	-	3/4" X 7/16"	20	30	-	88 $^{-0}_{+2}$	60	70	-	M10	0,80
EGE 4 - 5/8	-	-	94071503MFSS	5/8" X 3/8"	-	-	40	88 $^{-0}_{+2}$	-	-	100	M12	2,10
EGE 4 - 3/4	94071911MFSS	94071912MFSS	94071913MFSS	3/4" X 7/16"	20	30	49	88 $^{-0}_{+2}$	80	80	100	M12	2,10
EGE 4 - 1	94072501MFSS	94072502MFSS	94072503MFSS	1" X 17 mm	20	45	78	108 $^{-0}_{+2}$	80	90	100	M12	2,20
EGE 5 - 1	-	94072512MFSS	94072513MFSS	1" X 17 mm	-	45	78	108 $^{-0}_{+2}$	-	100	120	M20	4,00
EGE 5 - 1 1/4	94073101MFSS	94073102MFSS	94073103MFSS	1"1/4 x 3/4"	20	54	90	108 $^{-0}_{+2}$	100	120	130	M20	4,20
EGE 5 - 1 1/2	94073801MFSS	94073802MFSS	94073803MFSS	1"1/2 x 1"	20	71	119	108 $^{-0}_{+2}$	100	120	130	M20	4,20

FRONT SET UP

CATALOGUE UNDER REVIEW
For inquiries write at tensioner@chiaravalli.com

ON DEMAND AVAILABLE
IN STAINLESS STEEL AISI 316

CAD drawings available on our site
www.chiaravalli.com

Quantity, availability
and prices on B2B Chiaravalli

CHIARAVALLI GROUP BRAND **CHT®**
BELT TENSIONER ROLLER **CHT-RU**

- Belt tensioner roller including bearings and assembling parts everything made of stainless steel AISI 304
- Polyamide belt tensioner RU including bearings and assembling parts made of stainless steel AISI 304

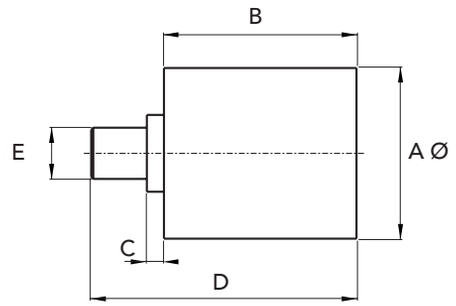

TYPE	P. NUMBER STAINLESS	P. NUMBER POLYAMIDE	A Ø	B	C	D	E	WEIGHT Kg. STAINLESS	WEIGHT Kg. PA
RU 3035	9403035SS	94040135SS	30	35	2	51	M8	0,15	0,07
RU 4045	9404045SS	94040145SS	40	45	6	67	M10	0,33	0,18
RU 5050	9405050SS	94040150SS	50	50	2,5	70	M12	0,60	0,23
RU 6060	9406060SS	-	60	60	2,5	80	M12	1,08	-
RU 6060	-	94040160SS	60	60	8	85	M12	-	0,34
RU 8080	9408080SS	94040180SS	80	80	2,5	100	M12	2,70	0,60
RU 8090	9409090SS	94040190SS	80	90	8,5	125	M20	-	1,10
RU 90135	94090135SS	94040135SS	90	135	8,5	170	M20	-	1,70

CATALOGUE UNDER REVIEW
For inquiries write at tensioner@chiaravalli.com

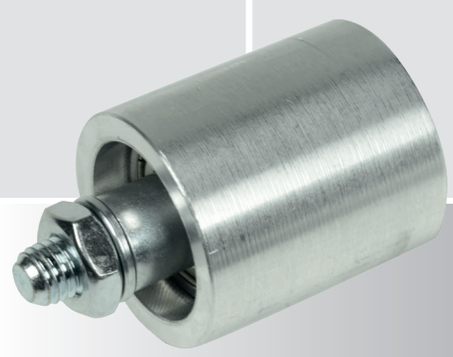

ON DEMAND AVAILABLE
IN STAINLESS STEEL AISI 316

CAD drawings available on our site
www.chiaravalli.com

Quantity, availability and prices on B2B Chiaravalli

- Chain tensioner sprockets including self-lubricating ball-bearings 2Z and accessories for the assembling all parts made of stainless steel AISI 304

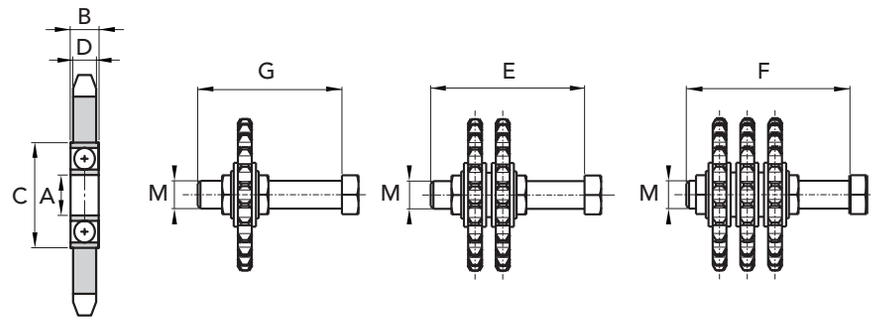

TYPE	P. NUMBER SIMPLE	P. NUMBER DOUBLE	P. NUMBER TRIPLE	Step Chain	Z Teeth	A	B	C	D h14	M	G	E	F
R	94060911SS	94060912SS	-	3/8"	15	10	8	26	5,3	M10	55	55	-
R	94060901SS	94060902SS	94060903SS	3/8"	15	12	8	28	5,3	M12	60	60	80
R	94061201SS	94061202SS	94061203SS	1/2"	15	12	10	32	7,2	M12	60	60	80
R	94061211SS	94061212SS	-	1/2"	15	10	9	30	7,2	M10	55	60	-
R	94061501SS	94061502SS	94061503SS	5/8"	15	12	10	32	9,1	M12	80	80	80
R	-	-	94061523SS	5/8"	15	20	12	42	9,1	M20	-	-	120
R	94061901SS	94061902SS	94061903SS	3/4"	15	12	12	37	11,1	M12	80	80	100
R	94061921SS	94061922SS	94061923SS	3/4"	15	20	14	47	11,1	M20	100	120	120
R	94062501SS	94062502SS	-	1"	12	12	12	37	16,2	M12	100	100	-
R	94062521SS	94062522SS	94062523SS	1"	12	20	15	47	16,2	M20	100	120	160
R	94063121SS	94063122SS	94063123SS	1"1/4	13	20	15	52	18,5	M20	100	140	160
R	94063821SS	94063822SS	94063823SS	1"1/2	11	20	15	52	24,1	M20	140	140	180

TYPE	P. NUMBER SIMPLE	WEIGHT Kg. SIMPLE	P. NUMBER DOUBLE	WEIGHT Kg. DOUBLE	P. NUMBER TRIPLE	WEIGHT Kg. TRIPLE
R	94060911SS	0,15	94060912SS	0,23	-	-
R	94060901SS	0,13	94060902SS	0,21	94060903SS	0,26
R	94061201SS	0,18	94061202SS	0,35	94061203SS	0,50
R	94061211SS	0,20	94061212SS	0,37	-	-
R	94061501SS	0,35	94061502SS	0,60	94061503SS	0,95
R	-	-	-	-	94061523SS	1,30
R	94061901SS	0,55	94061902SS	1,00	94061903SS	1,40
R	94061921SS	0,85	94061922SS	1,35	94061923SS	1,60
R	94062501SS	0,90	94062502SS	1,70	-	2,50
R	94062521SS	1,00	94062522SS	1,90	94062523SS	2,70
R	94063121SS	2,00	94063122SS	3,60	94063123SS	5,20
R	94063821SS	2,35	94063822SS	4,00	94063823SS	5,80

ON DEMAND AVAILABLE
IN STAINLESS STEEL AISI 316

CAD drawings available on our site
www.chiaravalli.com

Quantity, availability and prices on B2B Chiaravalli

CATALOGUE UNDER REVIEW
For inquiries write at tensioner@chiaravalli.com

GENERAL SALES CONDITIONS

1) ORDERS - Orders for special and standard material must always refer to offers made by CHIARAVALLI GROUP S.p.A. The orders are binding for the client.
Once work has commenced no cancellations or order reductions will be accepted unless the client reimburses the costs of the material and the work carried out up to the moment in which the order was suspended.
The quantity despatched can vary by ± 5% compared to the quantity ordered.

2) PRICES - The prices are those in force at the date of order.
All prices are for goods delivered ex-works Premezzo, packing excluded. If there should be any increase in production and material costs over the duration of the supply, CHIARAVALLI GROUP S.p.A. reserves the right to adapt the prices accordingly, even for orders in course.

3) TERMS OF DELIVERY - Only the terms of delivery indicated by CHIARAVALLI GROUP SpA are to be considered valid. However, they must only be considered as indicative.
In the event of difficulty in the procurement of materials, strikes or in any event in all cases of force majeure, the terms of delivery will be automatically extended without CHIARAVALLI GROUP S.p.A having to pay any reimbursement for damages.
The client is obligated to collect special material ordered when ready.

4) DELIVERIES - Deliveries are the responsibility of the purchaser and are carried out at his own risk and peril.
Any claims for shortages must be presented within 8 days of receipt of the goods.
If it is agreed that the cost of transport is to be paid, even if only in part, by CHIARAVALLI GROUP S.p.A., the latter reserves the right to choose the most economical means of transport.

5) PACKING - Packing will be invoiced at cost.

6) RETURNS - No returns for any reason will be accepted unless previously authorised and with packing, any customs clearance and the return paid for by the purchaser.
To cover warehouse and administrative expenses a debit note will be issued for approx. 15% of the value of the goods returned.

7) WARRANTY - CHIARAVALLI GROUP S.p.A. promises to repair or substitute free of charge any parts that they recognise as being defective. The questioned goods must be returned to the factory of CHIARAVALLI GROUP S.p.A., free of all expenses.
The warranty will be considered cancelled in the event that the parts returned as defective have been repaired or tampered with. The repair of defective parts carried out by the purchaser will only be accepted after authorisation from CHIARAVALLI GROUP S.p.A. and after their approval of the cost estimate. CHIARAVALLI GROUP S.p.A. does not accept responsibility or pay any reimbursement for damages that occur during the use of their products, even if defective.
Warranty is excluded for leakage of lubricant caused by wear of the oil seals.

8) RESPONSIBILITY - CHIARAVALLI GROUP S.p.A. does not accept responsibility or pay any reimbursement for damages that occur during the use of their products, even if defective.
CHIARAVALLI GROUP S.p.A. declines all responsibility in the execution of parts to a client's design under any patents.

9) PAYMENTS - Only payments carried out in the manner and terms agreed will be considered valid. Once the due date of payment has passed, CHIARAVALLI GROUP S.p.A. will calculate the interest on delayed payment at a rate that is 3% higher than the legal one, retaining the right to demand payment. In the event of delayed or missing payment by the purchaser, the company CHIARAVALLI GROUP S.p.A. reserves the right to suspend deliveries of the orders in course or to demand advance payment without having to pay any reimbursement or compensation to the purchaser. Any dispute regarding materials in manufacture or already possessed by the purchaser does not free the latter from the commitment of making the payment by the agreed date and for the whole amount of the invoice without making any deductions.

10) OWNERSHIP - All of the goods despatched remain the property of CHIARAVALLI GROUP S.p.A. until the invoice is fully paid.

11) COMPETENT COURT - Any controversy concerning business relations with CHIARAVALLI GROUP SpA will be dealt with under the jurisdiction of the Court of Busto Arsizio.

CATALOGUE UNDER REVIEW
For inquiries write at tensionar@chiaravalli.com

CHIARAVALLI GROUP SpA, do not accepts responsibility for any errors in the production of this catalogue and reserves the right to add to the drawings designs of the listed products any modification request by manufacturing requirements or due to evolution of the products.

dialogacrea.com

CHIARAVALLI Cz a.s.
Průmyslová 2083
59401 Velké Meziříčí
Česká republika
Tel. +420 566 502 030
www.chiaravalli.cz

CHIARAVALLI POLSKA Sp. z o. o.
ul. Polna 133
87 - 100 Toruń
Polska
Tel. + 48 56 623 30 00
www.chiaravalli.pl

CATALOGUE UNDER REVIEW
For inquiries write at tensioner@chiaravalli.com

Via per Cedrate, 476
21044 Cavaria con Premezzo (VA)
Italy
Tel. +39 0331 214 511
Fax +39 0331 218 175
www.chiaravalli.com
chiaravalli@chiaravalli.com

Localizzazione satellitare: coordinate N 45° 41.394 · E8° 48.726